118 Cocagne Cross Road
Cocagne, NB E4R 2J2
Tel.: (506) 576-6683 Fax: (506) 576-9714

HEALTH AND SAFETY

PROGRAM

Table of Contents

Section 1

Health and Safety Policy

1.1 Health and Safety Policy……1.3

1.2 Assignment of Responsibilities……1.5

1.3 Employees Rights……1.9

F-01-1 Right to Refuse Form……1.11

1.4 Performance Evaluations……1.13

M-01-1 Supervisor Performance Evaluation……1.14

F-01-2 Employee Performance Evaluation……1.17

1.5 Sub Contractor Policy……1.18

P-01-1 Sub Contractor Declaration……1.22

P-01-2 Pre-Construction Sub Contractor Safety Checklist……1.23

Section 1 Proof of Review……1.24

Section 2

Hazard Assessment Analysis and Control

2.1 Hazard Assessment Policy……2.3

2.2 Hazard Assessment Forms……2.7

F-02-1 Large Job Hazard Assessment (JHA)……2.10

P-02-1 Roof Loading Assessment (ROL)……2.14

F-02-2 Fall Protection Plan (FPP)……2.15

F-02-3 Large Job Daily Field Level Risk Assessment (FLRA)……2.17

S-02-1 Annual Comprehensive Hazard Assessment……2.18

2.3 Inventory Forms……2.19

S-02-2 Critical Task Inventory……2.20

S-02-3 Controlled Product Inventory……2.21

S-02-4 Tool and Equipment Inventory……2.22

2.4 Section 2 Proof of Review……2.23

Section 3

Safe Work Practices

3.1 Safe Work Practice Policy……3.3

3.2 Safe Work Practices……3.5

3.3 Safe Work Practice Proof of Review……3.95

Section 4

Safe Job Procedures

4.1 Job Procedure Definition……4.3

4.2 Job Procedure Index……4.5

4.3 Safe Job Procedure Proof of Review……4.183

Section 5

Company Rules

5.1 Disciplinary Policy……5.3

5.2 General Safety Rules……5.5

5.3 Disciplinary Action Record……5.7

F-05-1 Employee Warning Notice Form……5.8

5.4 Section 5 Proof of Review……5.9

Section 6

Personal Protective Equipment

6.1 Personal Protective Equipment Policy……6.5

PPE Issue Agreement Form……6.6

6.2 Personal Protective Equipment (PPE) Info Sheets……6.7

Eye and Face Protection Info Sheet……6.8

Fall Protection Info Sheet……6.9

Foot Protection Info Sheet……6.10

Head Protection Info Sheet……6.11

Hearing Protection Info Sheet……6.12

Limb and Body Protection Info Sheet……6.13

Respiratory Protection Info Sheet……6.14

6.3 Specialized PPE Inspection Forms……6.15

Harness Inspection……6.16
Non-Retracting Lanyard Inspection……6.17
Self-Retracting Lanyard Inspection……6.18
Lifeline Inspection……6.19
Rope Gran Inspection……6.20
Rollgliss Rescue Kit Inspection……6.21
6.4 Section 6 Proof of Review……6.22

Section 7

Maintenance

7.1 Maintenance Policy……7.3
7.2 Record Keeping……7.6
F-07-1 Aerial Lift Daily Inspection……7.7
F-07-2 Fork Lift Daily Inspection……7.8
F-07-3 General Roofing Equipment Daily Inspection……7.9
F-07-5 General Hoist Daily Inspection……7.10
F-07-4 Company Vehicle Incident Report……7.12
P-07-1 Tool/Vehicle/Equipment Maintenance……7.14
S-07-1 Emergency Equipment Inspection……7.15
Out of Service Tags……7.16
7.3 Vehicle Maintenance Plan……7.17
7.4 Section 7 Proof of Review……7.18

Section 8

Training and Communication

8.1 Training and Communication Policy……8.3
8.2 Orientations……8.6
S-08-1 General Roofing Equipment Daily Inspection……8.7
F-08-1 Visitor Safety Orientation……8.8
8.3 Toolbox Meeting Record……8.9
F-08-2 Toolbox Meeting Record……8.10
8.4 Employee Training Record……8.11
S-08-2 Employee Training Record……8.12
8.5 Section 8 Proof of Review……8.13

Section 9

Inspections

9.1 Inspection Policy……9.3

9.2 Procedures for Planned Inspections……9.6

9.3 Inspection Forms……9.9

S-09-1 Monthly Inspection Report……9.10

9.4 Section 9 Proof of Review……9.12

Section 10

Investigations

10.1 Investigation Policy……10.3

10.2 When an Accident Happens……10.7

10.3 Investigation Forms……10.9

F-10-1 Incident Report Form……10.10

S-10-1 Investigation Report Form……10.11

S-10-2 WorkSafe Reporting……10.15

10.4 Section 10 Proof of Review……10.16

Section 11

Environmental

11.1 Environmental Policy……11.3

11.2 Provincial Environmental Spill Containment Procedures……11.5

ERP-11-1 Environmental Spill Containment Form……11.6

S-11-1 Environment Incident Report Form……11.8

11.3 Section 11 Proof of Review……11.9

Section 12

Emergency Preparedness

12.1 Emergency Preparedness Policy……12.3

12.2 Emergency Preparedness Forms……12.6

F-12-1 Emergency Response Orientation……12.7

S-12-1 Emergency Response Drill……12.8

ERP-12-1 Emergency Response Plan – Fire……12.9

ERP-12-2 Emergency Response Plan – Injury or Death……12.10
ERP-12-3 Emergency Response Plan – Transportation of Injured……12.11
ERP-12-4 Post Emergency Process……12.12
ERP-12-5 Emergency Contacts – Cocagne, NB……12.13
ERP-12-6 Emergency Contacts – Fredericton, NB……12.14
ERP-12-7 Emergency Contacts – Saint John, NB……12.15
ERP-12-8 Emergency Contacts – Dartmouth, NS……12.16
ERP-12-9 Emergency Contacts – Winslow, PEI……12.17
ERP-12-10 Emergency Contacts – Mount Pearl, NL……12.18
ERP-12-11 Emergency Contacts – Moncton, NB……12.19
12.3 Section 12 Proof of Review……12.20

Section 13

Records and Statistics

13.1 Records and Statistics Policy……13.3
13.2 Summary Forms……13.5
P-13-1 Monthly Safety Summary……13.6
S-13-1 Yearly Safety Summary by Branch……13.7
13.3 Section 13 Proof of Review……13.9

Section 14

HR Policies

14.1 Cell Phone Policy……14.3
14.2 Drug and Alcohol Policy……14.6
P-14-1 Reasonable Grounds Testing Form……14.9
P-14-2 Post Incident Testing Form……14.11
P-14-3 Alcohol and Drug Testing Consent Form……14.12
P-14-4 Alcohol and Drug Testing – Information Release Form……14.13
P-14-5 Employee Assistance – Program Referral Form……14.14
Referral Assistance Contacts Form……14.15
14.3 Marijuana Policies……14.16
Medical Marijuana Policy……14.17
Recreational Marijuana Policy……14.19
14.4 Ergonomic Policy……14.21

14.5 Harassment Policy……14.23
14.6 Modified Duty Policy……14.26
M-14-1 Letter to Employees Physician Form……14.29
M-14-2 Treatment from Physician Form……14.30
M-14-3 Offer of Modified Work Form……14.32
M-14-4 Employee Progress Evaluation Form……14.33
P-14-5 ESRTW Evaluation Form……14.34
14.7 Personal Hygiene Policy……14.35
14.8 Prevention of Workplace Violence Policy……14.37
14.9 Section 14 Proof of Review……14.39

Section 15

Legislation and Reference

15.1 Legislation and Reference……15.3
15.2 Section 15 Proof of Review……15.4

Section 16

Supplementary Information

16.1 Master List – Forms……16.3
16.2 Forms by Requirement……16.5

118 Cocagne Cross Road
Cocagne, NB E4R 2J2
Tel.: (506) 576-6683 Fax: (506) 576-9714

HEALTH AND SAFETY

Section 1

Section 1

Health and Safety Policy

1.1 Health and Safety Policy……..1.3

1.2 Assignment of Responsibilities……..1.5

1.3 Employees Rights……1.9

F-01-1 Right to Refuse Form……1.11

1.4 Performance Evaluations……1.13

M-01-1 Supervisor Performance Evaluation……1.14

F-01-2 Employee Performance Evaluation……1.17

1.5 Sub Contractor Policy……1.18

P-01-1 Sub Contractor Declaration……1.22

P-01-2 Pre-Construction Sub Contractor Safety Checklist……1.23

1.6 Section 1 Proof of Review……1.24

118 Cocagne Cross Road
Cocagne, NB E4R 2J2
Tel.: (506) 576-6683 Fax: (506) 576-9714

HEALTH AND SAFETY POLICY

Section 1.1

Health & Safety Policy

Purpose

Our objective is a health and safety program that will reduce the number of injuries and illnesses to an absolute minimum, not merely in keeping with, but surpassing, the best experience of operations similar to ours. Our goal is zero incidents.

Policy

Atlantic Group of Companies (Atlantic Roofers Limited, North Shore Roofing Ltd., Atlantic Metaclad Limited, Atlantic Impervicoat Ltd.) recognizes that the responsibilities for health and safety are shared between all stakeholders. The personal health and safety of each employee of the company is of primary importance. The prevention of occupationally induced injuries, illnesses and loss is of such consequence that it will be given priority over operating productivity where necessary. To the greatest degree possible, management will provide all mechanical and physical facilities required for personal health and safety in keeping with the highest standards and a strong commitment toward occupational health and safety.

We will maintain a safety program conforming to the best practices of organizations of the same type. To be successful, such a program must start with proper attitudes toward injury and illness prevention on the part of both the employer and employees. It also requires co-operation in all health and safety matters, not only between management and employees, but also between each employee and their co-workers. Only through such a co-operative effort can a safety program be established and preserved in the best interest of all stakeholders. Management commits to working in a spirit of consultation and cooperation with all employees concerning matters relating to occupational health and safety.

Atlantic Group of Companies will work in cooperation and good faith to provide a safe and healthy working environment for all employees. This will be done through inspections, training, and all necessary safeguards that meet or exceed documented legislation.

Responsibilities

Managers/Supervisors are responsible for developing the proper attitudes toward health and safety for themselves and for those they supervise, and for ensuring that all operations are performed with the utmost regard for the health and safety of all stakeholders

Employees are responsible for wholehearted, genuine cooperation with all aspects of the health and safety program, including compliance with all rules and regulations, and for continually practicing safety while performing their duties.

February 10, 2022

Tammy Firth, VP Operations — Date

Atlantic Group of Companies

Feb 10/2022

Terry Casey, General Manager — Date

North Shore Roofers

118 Cocagne Cross Road
Cocagne, NB E4R 2J2
Tel.: (506) 576-6683 Fax: (506) 576-9714

ASSIGNMENT OF RESPONSIBILITIES

Section 1.2

Assignment of Responsibilities

The purpose of assigning specific responsibilities and accountability is to ensure all employees know their function and that our health and safety program accomplishes the objectives outlined in the health and safety policy.

Management

The Management of Atlantic Roofers Limited/North Shore Roofing Ltd. accepts the responsibility for providing the leadership of the health and safety program, and will be accountable for its effectiveness and improvement. Management is responsible to:

1. Establish a safety policy
2. Provide a safe work place
3. Maintain a safety program
4. Ensure the proper training of workers
5. Ensure PPE is available
6. Ensure regular inspections are completed
7. Establish safe work practices and job procedures
8. Correct unsafe acts and conditions
9. Provide first aid
10. Investigate all accidents and near misses
11. Report injuries to appropriate Worksafe or WCB
12. Ensure compliance with regulations
13. Cooperate with Joint Occupational Health and Safety Committee
14. Set a good example

Supervisor & Foreman

Supervisors and Foreman are responsible for developing proper attitudes toward safety and health in themselves and those they are directly responsible for and they will be accountable to Atlantic Roofers Limited/North Shore Roofing Ltd. management in all matters of health and safety. Supervisor and Foreman are responsible for:

1. Promote safety awareness
2. Enforce safe work practices
3. Instruct workers
4. Correct unsafe conditions and practices
5. Detect troubled employees
6. Enforce safety rules
7. Inspect for hazards
8. Investigate all incident, accidents and near misses
9. Ensure proper maintenance
10. Comply with company rules and OHS Act and Regulations
11. Set a good example

Employees

Employees are responsible for their cooperation in all aspects of health and safety program, and for continually practicing safety while performing their duties and will be accountable to their supervisor/foreman in matters of health and safety. Employees are responsible to:

1. Use safe work practices and job procedures
2. Report unsafe acts and conditions
3. Correct unsafe acts and conditions
4. Report any injury to the foreman

5. Comply with company rules and OHS Act and Regulations
6. Make safety suggestions
7. Set a good example
8. Report all incidents, accidents and near misses to your supervisor at once
9. Be responsible for your own safety and the safety of others at or near the site

Sub -Contractor

Sub-contractors are responsible for their cooperation in all aspects of the health and safety program, and for continually practicing safety while performing their duties and will be accountable to Atlantic Roofers Limited/North Shore Roofing Ltd. in all matters of health and safety. Sub-contractors are responsible to:

1. Comply with Atlantic Roofers Limited/North Shore Roofing Ltd policies and procedures
2. Attend initial site orientation
3. Attend toolbox talks
4. Comply with OHS Act and Regulations
5. Ensure proper maintenance
6. Ensure PPE is available
7. Inspect for hazards
8. Correct unsafe conditions and practices
9. Investigate all incidents and accidents
10. Enforce safety rules
11. Set a good example

Visitors

Visitors are responsible to comply with Atlantic Roofers Limited/North Shore Roofing Ltd. company rules and the Occupational Health and Safety Act and Regulations which include, but not limited to:

1. Compliance with site PPE requirements
2. Adherence to Atlantic Roofers Limited/North Shore Roofing Ltd. company rules
3. Comply with OHS Act and Regulations

First Aid Personnel

For all jobs, the Foreman will appoint adequate person(s) to provide such first aid services as may be required given the nature of the job site and government regulations. The person(s) appointed to this position shall possess an appropriate certificate in First Aid in accordance with relevant regulations and must be available at all times to administer first aid. First aiders are responsible to:

1. Administer first aid as requested
2. Maintain a first aid log
3. Requisition first aid supplies and equipment
4. Assist Safety Officer when necessary

JOHSC/Safety Representative

The JOHS/Representative will perform the functions as outlined in the Occupational Health and Safety Act and Regulations. The purpose is to use effective management processes and systems to prevent injury and illness, avoid costly lost time and property damage, manage workers' compensation assessments and maintain a productive work environment. JOHSC/Representative is responsible to:

1. Hold regular meetings
2. Maintain minutes and records of committee activities
3. Work cooperatively with employees and management

4. Identify hazards, develop implement and evaluate health and safety program
5. Receive, investigate, all health and safety complaints, concerns and work refusals
6. Participate in inspections, inquires, investigations and audits
7. Advise on development, implementation and evaluation of health and safety program
8. Participate in educational training programs for employees
9. Advise on the use of PPE
10. Make written recommendations

Yves Bradet, General Manager
Atlantic Roofers Limited

Jan 14/19
Date

Terry Casey, General Manager
North Shore Roofing Ltd.

Jan 14/19
Date

118 Cocagne Cross Road
Cocagne, NB E4R 2J2
Tel.: (506) 576-6683 Fax: (506) 576-9714

EMPLOYEE RIGHTS

Section 1.3

Employee's Rights

The Occupational Health and Safety Act outlines the basic rights of all employees:

1. **The Right to Know** – Every employee who works in a possible hazardous condition has the right to know the danger of the condition and how to protect themselves from the hazards. WHMIS (Workplace Hazardous Information System) is a Canada wide system designed to provide information about hazardous material used by employee's on the job (See WHMIS Policy).
2. **The Right to Participate** – Every employee has the right to participate in safety meetings when it concerns their safety at a worksite. This may be as a member of the Joint Occupational Health and Safety Committee or in a site specific safety meeting (toolbox). The primary purpose is to involve employees and management in the exchange of safety information.
3. **The Right to Refuse** – Every employee has the right to refuse to do work when there is reasonable grounds for believing that the act is likely to endanger the employee or the health and safety of any other person on site.
4. **The Right to Make a Complaint or File a Grievance** – Every employee has the right to make a complaint of file a grievance as set out in the Occupational Health and Safety Act.

Procedure to refuse unsafe work:

1. Report the hazard to your supervisor and work with them to correct the problem
2. If your supervisor disagrees with you regarding the safety of the situation, they will explain why and advise you to return to work
3. If you do not agree with the supervisor's opinion, the matter will be referred to the Joint Occupational Health and Safety Committee for investigation
4. If you do not agree with the opinion of the Committee, the matter will be referred to the appropriate governing body.

When an employee has refused to do a job, that job may be assigned to another worker if the employee is told:

1. That another worker has refused to do the job
2. Why the worker has refused the job
3. The they also have the right to refuse the job

Atlantic Roofers Limited North Shore Roofing Ltd Occupational Health & Safety Program	Date Last Revision: *Jan 2018*	Document No. **F-01-1**
	Title: **Right to Refuse**	**Page 1 of 2**

Step 1: The employee reports the concern to their immediate supervisor

I, _____ , refuse to do the act assigned by my supervisor. I believe that this act is likely to endanger my health and safety (or the health and safety of others) for the following reason(s):

- ☐ I am not properly trained for the job
- ☐ I do not have enough experience for the job
- ☐ I do not have the necessary skills for the job
- ☐ I do not have the necessary equipment for the job
- ☐ Physical or mechanical hazards
- ☐ Chemical hazards
- ☐ Biological hazards
- ☐ Other (specify)

Detailed explanation:

Date signed _____ , by _____

Submitted to the supervisor _____ at (time) _____

Signed by supervisor upon receipt: _____

Answer from the supervisor:

☐ I find that _____ has reasonable grounds for believing that the act is likely to endanger the health and safety of the employee or the health and safety of others. Therefore, I recommend the following remedial action(s) to be taken or I will take the following remedial action(s) so that the employee may resume work.

☐ I find that _____ does not have reasonable grounds for believing that the act is likely to endanger his/her health and safety or the health and safety of any other employees. Therefore, I advise the employee to do that act.

Date signed _____ At (time) _____

Signature of supervisor: _____

Signature of worker:

Step 2: The employee refers the matter to the JOHSC

The worker submits this formula to JHSC.

Received by: _____ , representing the workers, and

_____ , representing the employer

on (date) _____ at (time) _____

Answer: We, the members of the JHSC, have studied the reasons for this right to refuse submitted by

_____ , and we make the following recommendation(s):

☐ The JHSC finds the employee has reasonable grounds and make the following recommendation(s) To the employer

_____

_____

_____

_____

☐ Employer accepts recommendation ☐ Employer refuses recommendation

_____ (Employer)

The JHSC finds that the employee does not have reasonable grounds for the following reason(s)

_____

_____

_____

_____

The JHSC cannot reach a decision and have the following positions:

_____

_____

_____

_____

The JHSC advises _____ to refer the matter to an officer of WorksafeNB

_____ (Employee Representative)

_____ (Employer Representative)

118 Cocagne Cross Road
Cocagne, NB E4R 2J2
Tel.: (506) 576-6683 Fax: (506) 576-9714

PERFORMANCE EVALUATIONS

Section 1.4

This section must be completed for all supervisors and should reflect their overall performance. The manager is consultation with all direct report will complete it. It shall serve as a standard for all discussions and may be added to as needed be. Each of the skills listed below are to be rated as follow:

EMPLOYEE INFORMATION

Employee _____ **Date** _____

Job Title _____

Department _____ **Manager** _____

RATINGS

PLANNING & ORGANIZING ABILITY Ability to analyze situations, effectively design strategies to achieve short and long term objectives, and appropriately develop schedules and actions plans to coordinate and use resources effectively.

Comments:

Overall Rating:	Needs Improvement	Meets Most Expectations	Meets All Expectations	Exceeds All Expectations

JOB KNOWLEDGE Overall current technical knowledge as demonstrated through practical application and ability to learn and retain information. Knowledge of processes, systems, and resources required to accomplish goals. Knowledge of the company's overall strategic goals. Demonstrated knowledge of the industry, including the competition.

Comments:

Overall Rating:	Needs Improvement	Meets Most Expectations	Meets All Expectations	Exceeds All Expectations

INNOVATION Ability to exercise original thinking, ingenuity and initiative to introduce new ideas or courses of action. Ability to make creative and acceptable contributions to a project, products, new methods, techniques and/or processes.

Comments:

Overall Rating:	Needs Improvement	Meets Most Expectations	Meets All Expectations	Exceeds All Expectations

PRODUCTIVITY Ability to work efficiently to meet deadlines, schedules, assignments, and projects. Ability to execute and follow through to completion, ability to accomplish goals and objectives.

Comments:

Overall Rating:	Needs Improvement	Meets Most Expectations	Meets All Expectations	Exceeds All Expectations

QUALITY The caliber of work produced in terms of accuracy, thoroughness, and dependability of results.

Comments:	**Overall Rating:**	**Needs Improvement**	**Meets Most Expectations**	**Meets All Expectations**	**Exceeds All Expectations**

TEAM PARTICIPATION Ability to work effectively on teams to meet common goals. Communication skills, including effectiveness, timeliness and pro-activeness. Display of respect toward other team members. Consideration of the effects of decisions across the organization, support of final decisions, even if not in complete agreement with them.

Comments:	**Overall Rating:**	**Needs Improvement**	**Meets Most Expectations**	**Meets All Expectations**	**Exceeds All Expectations**

HEALTH AND SAFETY Ability to ensure compliance of all health and safety rules and regulations; knowledge of company specific, job site specific and provincial regulations. Ability to complete all required inspections including weekly submittals to management and supervisors.

Comments:	**Overall Rating:**	**Needs Improvement**	**Meets Most Expectations**	**Meets All Expectations**	**Exceeds All Expectations**

LEADERSHIP ABILITIES Ability to clearly communicate priorities, to obtain understanding and acceptance of and commitment to objectives from subordinates and peers. Ability to effectively administer and direct the work within his/her area of responsibility; to lead the group in meeting objectives; to facilitate effective solutions arising in the group; to encourage teamwork; to encourage improvement in systems and structures within the group. Ability to cope with change within the organization and within the group. Demonstration of manager's decisiveness, consistency, dependability, and perseverance.

Comments:	**Overall Rating:**	**Needs Improvement**	**Meets Most Expectations**	**Meets All Expectations**	**Exceeds All Expectations**

DEVELOPMENT OF SUBORDINATES Ability to set high but achievable standards; to encourage subordinates to constantly improve their performance and develop new skills; to encourage new or creative ways of thinking; to effectively delegate responsibility and authority to increase subordinates' competence in their current positions.

Comments:	**Overall Rating:**	**Needs Improvement**	**Meets Most Expectations**	**Meets All Expectations**	**Exceeds All Expectations**

FISCAL RESPONSIBILITY Effectiveness in developing and maintaining department budgets. Ability to exercise economy and restraint in utilizing available resources. Ability to work towards an improved profit position.

Comments:	**Overall Rating:**	**Needs Improvement**	**Meets Most Expectations**	**Meets All Expectations**	**Exceeds All Expectations**

ORGANIZATIONAL SENSITIVITY Ability to apply the company's strategic objectives to department decision making; understanding of the effect of decisions on the rest of the organization.

Comments:	**Overall Rating:**	**Needs Improvement**	**Meets Most Expectations**	**Meets All Expectations**	**Exceeds All Expectations**

Review employee's list of accomplishments, activities and projects during the review period, and offer comments.

List performance objectives for the next review period.

List job-related courses to be taken, and/or skills to be developed over the next review period which will enhance overall professional development.

VERIFICATION OF REVIEW

By signing this form, you confirm that you have discussed this review in detail with your supervisor. Signing this form does not indicate that you agree with this evaluation.

EMPLOYEE SIGNATURE:_____ **DATE:** _____

SUPERVISOR SIGNATURE: _____ **DATE:** _____

MANAGER SIGNATURE: _____ **DATE:** _____

EMPLOYEE'S COMMENTS

Atlantic Roofers Limited North Shore Roofing Ltd Occupational Health & Safety Program	Date Last Revision: *Jan 2018*	Document No. **F-01-2**
	Title: **Employee Performance Evaluation**	**Page 1 of 1**

Employee Name: _____ Reporting Period: Jan-June Year: _____

July-Dec ☐ Year: _____

Evaluator's Name: _____ Date: _____

Any "Area of Evaluation" assessed "below" or "exceeds" the standard must be substantiated with comments. For additional space use the back of this page.

Area of Evaluation

	Below	Meets	Exceeds
Job Knowledge:	☐	☐	☐
Supervisory Responsibilities:	☐	☐	☐
Communication Skills:	☐	☐	☐
OH&S:			
Inspection Completed?	☐	☐	☐
Toolbox talks held?	☐	☐	☐
Hazard assessment completed?	☐	☐	☐
Rules reinforcement done?	☐	☐	☐
Inspections done?	☐	☐	☐
New Hire Orientation completed?	☐	☐	☐
First Aid kit records kept?	☐	☐	☐
Incident investigations conducted?	☐	☐	☐
Other responsibilities to OH&S achieved?	☐	☐	☐

Notes & close out comments:

_____

_____

_____

Employee Acknowledgement: Sign:_____ Date:_____ (mm/dd/yyyy)

Management Approval: Sign: _____ Date: _____ (mm/dd/yyyy)

Follow up: Required? ☐ Yes by (date- m/d/y) _____ ☐ No

118 Cocagne Cross Road
Cocagne, NB E4R 2J2
Tel.: (506) 576-6683 Fax: (506) 576-9714

SUB CONTRACTOR POLICY

Section 1.5

Sub-Contractor Policy

Purpose

Atlantic Roofers Limited/North Shore Roofing Ltd. and its contractors share responsibility for attempting to ensure that people are not harmed as a result of construction, maintenance or related activities. As a consequence, Atlantic Roofer Limited/North Shore Roofing Ltd. requires that contractors operate safely and in accordance with the appropriate legislation and the Atlantic Roofers Limited/North Shore Roofing Ltd. Health and Safety Program.

Policy

Prior to being awarded a contract for construction and related work, all prospective contractors shall be informed of this policy and provided with a written outline of the safety performance expected of all contractors. The safety record of a prospective contractor shall be one of the factors considered in the awarding of a contract for construction or related work.

Atlantic Roofers Limited/North Shore Roofing Ltd. shall ensure that all subcontractors fully co-operate in ensuring the health and safety policies and procedure requirements of Atlantic Roofers Limited/North Shore Roofing Ltd. and the owner client are met or exceeded during the contract work.

Responsibility

Atlantic Roofers Limited/North Shore Roofing Ltd., management is responsible for taking reasonable steps to ensure that work undertaken by contractors does not endanger people or property. This shall be accomplished through the following:

1. Ensuring that all subcontract companies and/or individuals are aware of Atlantic Roofers Limited/North Shore Roofing Ltd. health and safety policies, including those of the owner/client and the implications of those policies. This shall include orientation to owner/client drug and alcohol policies, where these exist.
2. Including all subcontractors in pre-job meetings, hazard assessments, safety meetings and incident investigations where reasonable or participating in the subcontractor job safety process to ensure the subcontractor work is carried out as planned and relevant legislation and job requirements are observed throughout the work.
3. Investigate all incidents/accidents reported by the subcontractor. Ensuring all incidents, as outlined in Atlantic Roofers Limited/North Shore Roofing Ltd. Incident Investigation Policy, are reported to the owner/client(s) by Atlantic Roofers Limited/North Shore Roofing Ltd.
4. Ensure an active inspection monitoring process is followed at the work environment throughout the duration of work to assess our subcontractor's competence at managing health and safety requirements of the work. Atlantic Roofers Limited/North Shore Roofing Ltd. shall reserve the right to stop or restrict the work of our subcontractors if in our opinion the work is not meeting job and/or legislative requirements.
5. Atlantic Roofers Limited/North Shore Roofing Ltd. shall conduct post job performance reviews on the health and safety performance of our subcontractors. These reviews may include, but not limited to, cost control, active participation in safety meetings, quality of work and housekeeping.

Sub-Contractors are responsible to:

1. Comply with their company safety policy and/or program or that of Atlantic Roofer Limited/North Shore Roofing Ltd. and the owner/clients, including adherence to the Drug and Alcohol Policy applicable to the work site. Read and sign off on the Atlantic Roofer Limited/North Shore Roofing Ltd. Sub-contractor Policy and ensure work is carried out in accordance to this policy. Provide documented evidence of an account of Letter of Good Standing in the Construction Safety Association, or equivalent, (COR) program, or Contractor declaration duly signed. (see attached) prior to beginning work and shall maintain its account in good standing throughout the performance of work.

2. Ensure that all equipment provided by the sub-contractor is maintained in good condition and that it meets all the applicable legislative requirements and the standards of Atlantic Roofers Limited/North Shore Roofing Ltd.
3. Provide all necessary personal protective equipment and training to their personnel
4. Participate in all safety meetings, job hazard assessments, safety inspections and incident investigations as outlined in this policy.
5. Provide reports to Atlantic Roofers Limited/North Shore Roofing Ltd. as required including any and all incidents, including near miss incidents; as they occur.
6. Ensure to cooperate and consult with Atlantic Roofer Limited/North Shore Roofing Ltd. and the owner/client in the worksite monitoring process including any active incident investigations and post job reviews.
7. Immediately remove from an Atlantic Roofers Limited/North Shore Roofing Ltd. worksite any personnel who do not comply with site health and safety requirements.

Yves Bradet, General Manager
Atlantic Roofers Limited

Jan 14/19
Date

Terry Casey, General Manager
North Shore Roofing Ltd.

Jan 14/19
Date

Enclosure(s)

1.5.1 Sub-Contractor Policy Supplementary Information
Sub-Contractor Declaration (Form P-01-1)
Pre-Construction Sub-Contractor Safety Checklist (Form P-01-2)

1.5.1 Sub-Contractor Supplementary Information

Sub-Contractors or any parties who receive a purchase or contract from Atlantic Roofer Limited/North Shore Roofing Ltd. are required to submit all supplementary information duly signed in order to be authorized to perform sub-contract work on Atlantic Roofers Limited/North Shore Roofing Ltd. work sites.

1. Copy of Letter of Good Standing in the Construction Safety Association, or equivalent, (COR) Program, or Contractor Declaration duly signed. (see attached form A-01-3, Sub-Contractor Declaration)
2. WHSCC/WCB/WorkSafe letter of good standing valid for the entire period of work
3. Certificate of insurance specifying Atlantic Roofer Limited/North Shore Roofing Ltd as additional insured.

This information has to be returned prior to access to any job sites of Atlantic Roofers Limited/North Shore Roofing Ltd.

Atlantic Roofers Limited North Shore Roofing Ltd Occupational Health & Safety Program	Date Last Revision: *Jan 2018*	Document No. **P-01-1**
	Title: **Sub-Contractor Declaration**	**Page 1 of 1**

Sub-Contractors or any parties engaged to work at any Atlantic Roofers Limited/North Shore Roofing Ltd. job sites must agree to participate in the following:

1. Prior to starting work, complete a Pre-Job hazard assessment; this will identify all potential hazards and will outline corrective actions required to eliminate or control these hazards.
2. Conduct or participate in all on site *Tool Box* meetings, and where required play an active role as a member of the Work-site Safety Committee.
3. Ensure that any materials, controlled under WHMIS Legislation, are properly labeled and are accompanied with a current MSDS on delivery to the job site.
4. Conduct regular *Fall Protection inspections* where working at heights is involved.
5. Provide adequate supervision and workers with appropriate training to perform the task(s) safely and in accordance with legislation.
6. Upon Request, provide Copies of all documentation to Atlantic Roofers Ltd./North Shore Roofing Ltd. to verify compliance with this policy.

All job site workers are required to have Safety Orientation and WHMIS training, at minimum. Additional training is as required for the task/work to be performed.

Sub-Contractors or any parties must have knowledge of and comply with the Occupational Health & Safety Act and any pursuant regulations, codes or practices relative to the work to be performed.

Atlantic Roofers Ltd. /North Shore Roofing Ltd. reserve the right to require sub-contractors, hired for work, follow the terms of Atlantic Roofers Limited/North Shore Roofing Ltd. COR certified safety program.
Failure to comply with the terms of the Occupational Health & Safety Act and other policies governing the work site will result in disciplinary action up to and including the removal of any individual(s) from the worksite.

Sub-Contractor: (Print): _____

Sub-Contractor Authorized Signature: _____ Date: _____

ARL Project Manager: _____ Date: _____

Project Name: _____ Location: _____

Atlantic Roofers Limited North Shore Roofing Ltd Occupational Health & Safety Program	Date Last Revision: *Jan 2018*	Document No. **P-01-2**
	Title: **Pre-Construction Sub-Contractor Safety Checklist**	**Page 1 of 1**

Project: _____ Start Date: _____

Check off completed items, put N/A beside those that do not apply.

	Please Check		**Please Check**
1. A copy of our occupational Health and Safety Manual has been reviewed.		14. MSDS' given to Atlantic Roofers Rep.	
2. Sub-contractors' safety policy received		15. First aider for subcontractor's crew	
3. Site safety representative identified		16. First aid kit on site	
4. Written emergency procedures supplied		17. Hazardous waste disposal policy	
5. Employee orientation completed		18. Liability insurance certificates	
6. Written safe work practices submitted		19. GFI/Electrical policy reviewed	
7. Fall protection training and rescue plan completed		20. Accident investigations notification	
8. Personal protective equipment review:		21. Verbal, written discipline forms reviewed	
a. Hard hats		22. Supervision requirements met	
b. Footwear		23. Fire protection sufficient	
c. Safety Glasses		24. Barricades, open hole and signs marked	
d. Hearing		25. Site specific training requirements met	
e. Dust and Fumes		26. Dust control requirements met	
9. Housekeeping requirements reviewed		27. Riggers competency (if using)	
10. Tool Box safety talks (weekly)		28. Forklift competency (if using)	
11. Material storage (locations)		29. Elevating work platforms competency	
12. Landing platforms (capacities)		30. WorkSafe clearance certificate	
13. WHMIS training verification		31. Sub-contractor' MSDS received	

The above items have been reviewed by all parties noted and are found to be satisfactory.

Sub-Contractor: (Print): _____

Sub-Contractor Authorized Signature: _____ Date: _____

ARL Project Manager (Print): _____

ARL Project Manager Signature: _____ Date: _____

1.6 Section 1 Proof of Review

Section / Form	Development			Revised			Reviewed		
	Date		By Whom	Date		By Whom	Date		By Whom
	M	Y		M	Y		M	Y	
1.1	03	05	Br. Mgrs.	04	18	E. Joy	01	19	VP
1.2	03	05	Br. Mgrs.	04	18	E. Joy	01	19	VP
1.3	03	05	Br. Mgrs.	04	18	E. Joy	01	19	VP
F-01-1	03	05	Br. Mgrs.	04	18	E. Joy	01	19	VP
1.4	03	05	Br. Mgrs.	04	18	E. Joy	01	19	VP
M-01-1	01	14	T. Firth	04	18	E. Joy	01	19	VP
F-01-2	01	14	T. Firth	04	18	E. Joy	01	19	VP
1.5	03	05	Br. Mgrs.	04	18	E. Joy	01	19	VP
1.5.1	03	05	Br. Mgrs.	04	18	E. Joy	01	19	VP
P-01-1	03	05	Br. Mgrs.	04	18	E. Joy	01	19	VP
P-01-2	01	14	T. Firth	04	18	E. Joy	01	19	VP

118 Cocagne Cross Road
Cocagne, NB E4R 2J2
Tel.: (506) 576-6683 Fax: (506) 576-9714

HAZARD ASSESSMENT, ANALYSIS AND CONTROL

Section 2

Section 2

Hazard Assessment Analysis and Control

2.1 Hazard Assessment Policy……2.3

2.2 Hazard Assessment Forms……2.7

F-02-1 Large Job Hazard Assessment (JHA)……2.10

P-02-1 Roof Loading Assessment (ROL)……2.14

F-02-2 Fall Protection Plan (FPP)……2.15

F-02-3 Large Job Daily Field Level Risk Assessment (FLRA)……2.17

S-02-1 Annual Comprehensive Hazard Assessment……2.18

2.3 Inventory Forms……2.19

S-02-2 Critical Task Inventory……2.20

S-02-3 Controlled Product Inventory……2.21

S-02-4 Tool and Equipment Inventory……2.22

2.4 Section 2 Proof of Review……2.23

118 Cocagne Cross Road
Cocagne, NB E4R 2J2
Tel.: (506) 576-6683 Fax: (506) 576-9714

HAZARD ASSESSMENT POLICY

Section 2.1

Hazard Assessment Policy

Purpose

To provide a policy whereby Atlantic Roofers Limited/North Shore Roofing Ltd. can adequately evaluate each job and work site, evaluating and identifying job hazards with the goal to minimize employee exposure to hazards. This policy will also assist in the selection of personal protective equipment (PPE) to every affected employee, who as part of their job descriptions, are exposed to numerous chemical, physical and environmental hazards occurring at the workplace.

Policy

It is the policy of Atlantic Roofers Limited/North Shore Roofing Ltd. to implement a systematic process for the identification and control of hazards. Atlantic Roofers Limited/North Shore Roofing Ltd. employees involved in the hazard identification and risk assessment will be provided training. The JOHSC/Representative shall be involved in the cooperative identification and mitigation of hazards in their workplace. The Health and Safety Program will use the following three approached to control hazards:

1. Engineering Controls – are related to the design and layout of the workplace, workstation, or work process. Examples would include items such as changes to lighting, noise control, ventilation and installation of guard around moving parts.
2. Administrative Controls – deal with managing and directing people. Such as direction might include implementing new policy, modifying work practices and procedures, or proving training. Administrative controls also extend to area of materials and equipment procurement, for example, less hazardous products may be obtained.
3. Personal Protective Equipment – generally involves placing a “barrier” between the worker and hazard. Examples would include respiratory protection, hand protection, eye protections, etc. PPE is to be used as a supplement to but not as a substitute for engineering controls. PPE may be used as a sole means of control if the use of other controls is not feasible.

Responsibilities

Atlantic Roofer Limited/North Shore Roofing Ltd. will:

1. Perform a comprehensive annual hazard assessment for all activities, equipment, processes and property under the control of Atlantic Roofers Limited/North Shore Roofing Ltd.
2. Review the comprehensive hazard assessment annually to ensure its ongoing suitability for out operational needs.

Supervisors will:

1. Prior to the start of the any job Atlantic Roofers Limited/North Shore Roofing Ltd. will perform a hazard assessment.
2. Be aware of the job and its hazards and record all concerns.
3. Report hazards to immediate supervisor or JOHSC/Representative
4. Hold weekly toolbox meetings

Employees will:

1. Be aware of the job site and its hazards and record all concerns
2. Report hazards to immediate supervisor or JOHSC/Representative
3. Participate in daily site inspections and weekly toolbox meetings

Sub-Contractors will:

1. Prior to the start of any job for Atlantic Roofers Limited/North Shore Roofing Ltd. will perform a hazard assessment to be reviewed by Atlantic Roofers Limited/North Shore Roofing Ltd.

2. Be aware of the job site and its hazards and record all concerns
3. Participate in daily site inspections and toolbox meetings
4. Participate in initial site orientation prior to any work being done.

Duty to Report Hazards/Resolution Procedures

All employees have a responsibility to report hazards and participate in their resolution. Where an employee believes that any condition, device, equipment, machine, material thing or any other aspect of the workplace is or may be dangerous, the employee shall:

1. Resolve hazard if they have the authority to do so
2. Report hazard immediately to their supervisor
3. If the problem is not remedied to employee's satisfaction, report it to the JOHSC/Representative
4. If the problem is still not remedied to their satisfaction, report it to the appropriate to the appropriate Government department.

Note: The occupational health and safety act protects persons exercising this duty from any discipline or discriminatory actions (see employee rights in section 1.3 of this program)

Types of Hazard Assessment

Hazard Assessments will be conducted under the following circumstances:

Annual Facility Hazard Assessment	This type of assessment will be conducted for all fixed facility locations at least **annually**. The safety coordinator and/or JOHSC member will use the "Comprehensive Hazard Assessment Annual Review" form S-02-1 and submitted within 2 days to Branch Manager for actions required, follow up, record keeping and filing.
Roof Loading Assessment	Managers/Supervisors will use the "Roof Loading Assessment" form **P-02-1** and submit to the Branch Manager prior to work starting for actions required, follow up, record keeping and filing. Any condition that requires action must be completed before start up. A copy **must** be kept on all job sites for duration of project. This type of assessment must be conducted prior to commencement of all projects where roof loading will take place.
"Small" Job Site Hazard Assessment	This "Small Job" will be defined as a job site length of **5 days or less**. Supervisors will use the "Field Level Risk Assessment" form **F-02-3**. This type of hazard assessment must be conducted prior to commencement of all projects. All hazards that require action must be corrected prior to starting the project. The completed form must be submitted by the end of the week it was conducted in to Branch Manager for actions required, follow up, record keeping and filing. A copy **must** be kept on all job sites for duration of project.
"Large" Job Site Hazard Assessment	This "Large Job" will be defined as a job site length of **more than 5 days**. Project Managers/Supervisors will use the "Large Job Hazard Assessment" form **F-02-1** and submit by the end of the week it was conducted in to Branch Manager for actions required, follow up, record keeping and filing. Prior to starting the project all noted hazards must be corrected. A copy **must** be kept on all job sites for duration of project. This type of hazard assessment must be conducted prior to commencement of all projects.
Field Level Hazard Assessment	Field level hazard assessments must be conducted on a daily basis by the supervisor and signed by all employees present during that day. Supervisors will use the duplicate booklet provided ("Field Level Risk Assessment" **F-02-3**) and submit by the end of the week it was conducted in to Branch Manager for actions required, follow up, record keeping and filing. Prior to work starting for the day all noted hazards must be corrected. A copy **must** be kept on all job sites for duration of project.

Yves Bradet, General Manager
Atlantic Roofers Limited

Jan 14/19
Date

Terry Casey, General Manager
North Shore Roofing Ltd.

Jan 14/19
Date

118 Cocagne Cross Road
Cocagne, NB E4R 2J2
Tel.: (506) 576-6683 Fax: (506) 576-9714

HAZARD ASSESSMENT FORMS

Section 2.2

Hazard Ranking by Risk (Consequences and Probability)

Once a hazard has been identified, hazard ranking provides us with a gauge to determine where to start, as with most elements in a safety program, our priorities will be determined by addressing the worst first.

Hazard Consequence Category:

A	Catastrophic	-	May cause death, injury, or company shutdown
B	Critical	-	May cause severe injury, severe occupational illness or major property damage
C	Marginal	-	May cause minor injury or minor occupational illness resulting in workday(s) lost, or minor property damage
D	Negligible	-	Probably would not affect personnel safety or health. Could result in a lost workday, and is still in violation of specific criteria

Hazard Probability Category:

1	Probable -	Likely to occur immediately or within a short period of time when exposed to the hazard
2	Reasonably Probable -	Probably will occur in time
3	Remote -	Possible to occur in time
4	Extremely Remote -	Unlikely to occur

During the implementation of the safety program, you will want to focus on hazards that fall in the A1, A2, B1 and B2 rating. As time permits, all potential hazards should have controls identified and implemented.

Remember – Regulatory requirements may dictate priorities

Hazard Assessment Techniques

General

A hazard assessment will identify any potential and apparent hazards in the work environment. To eliminate or control the hazards, actions will be taken prior to starting work at the site.

The basic procedures for conducting a hazard assessment are:

1. Assemble the people that will be involved
2. Discuss possible hazards with these people
3. Tour the entire operations of the company
4. Look for possible hazards originating with environment, material, equipment and people
5. Keep asking the questions “What if?”
6. Record all hazardous situations
7. Rank the items on a “Worst first” basis
8. Identify corrective action required
9. Assign a person responsible for each correction and date to complete

Project Location: _____ **# in Crew:** _____

Date of Assessment: _____ **Completed by:** _____

Hazard Assessment has been communicated to all affected employees who are involved in the work as indicated and signed by employees on Form F-12-1 "Emergency Response Orientation."

Project Site Comprehensive Hazard Assessment Form (Page 1)

Step 1: On the Hazard Identification checklist, check off all the hazards or potential hazards that are present at your work site. Add any identified hazards specific to your work site to the list:

HAZARD IDENTIFICATION					
Physical Hazards			**Biological Hazards**		
1	Falls (Perimeter edges/Openings)	☐	28	Viruses	☐
2	Injuries due to Improper/Defective Tool Use	☐	29	Fungi (mold)	☐
3	Lifting and handling loads	☐	30	Bacteria	☐
4	Objects Falling from Above	☐	31	Blood and Body Fluids	☐
5	Other people/traffic on site	☐	32	Sewage	☐
6	Rigging	☐	33	Asbestos	☐
7	Hoisting	☐	34	Other:	☐
8	Housekeeping	☐	35	Other:	☐
9	New Employees	☐			
10	Slips and Trips	☐	**Chemical Hazards** (identify types)		
11	Moving parts of machinery	☐	36	Primer (Specify):	☐
12	Use of Kettle	☐	37	Primer (Specify):	☐
13	Use of Propane	☐	38	Other:	☐
14	Use of Torch	☐			
15	Lighting	☐	39	Fumes (identify types)	☐
16	Electricity/Power Lines	☐	40	From Torching	☐
17	Dust/Debris	☐	41	From Kettle	☐
18	Noise	☐	42	Other:	☐
19	Fire from Torch Use	☐	43	Other:	☐
20	Waste Disposal	☐			
21	Windy Conditions	☐	**Psychological Hazards**		
22	Icy Conditions	☐	44	Working conditions	☐
23	Temperatures (Hot/Cold)	☐	45	Fatigue	☐
24	Other: Use of Ladders	☐	46	Stress	☐
25	Other:	☐	47	Workplace Violence/Harassment	☐
26	Other:	☐	48	Other:	☐
27	Other:	☐	49	Other:	☐

Step 2: Hazard Assessment and Control Sheet (Page 2)

- Take the hazards identified on the checklist above and list them on the Hazard Assessment and Control Sheet by number.
- Identify the controls that are in place: engineering, administrative, PPE or combination for each hazard

Project Site Job Hazard Assessment

Project: _____	Location: _____	Date: _____
Supervisor: _____	Management: _____	Page ___ of ___

Critical Task (Equipment, Tools, Materials, Conditions)	Potential Health and Injury Hazards	Rank	Control(s) (Required Action)	Person Responsible	Date Completed
(1) Falls (Perimeter Edges / Openings) Working at Heights	Serious Injury, Death from fall	A 3	- JP 12 - Fall Protection - Code of Practice - JP 16 - Fall Protection - Rail Guard 200 Installation - F-02-2 Fall Protection Plan - FPP	Foreman and All crew members	At Job Start up & duration of project.
(2) Injuries due to Improper/Defective Tool Use	Cuts from moving parts Repetitive movements	C 3	- SWP #54 to #57. - Use tool and equipment guards - OHS General Reg.'s Part IX.	Foreman and All crew members	At Job Start up & duration of project.
(3) Lifting and Manual Handling	Musculoskeletal Injuries	C 3	- JP #30. SWP #3. - Use of Lifting & Handling Equipment. - OHS General Reg.'s Part VIII	Foreman and All crew members	At Job Start up & duration of project.
(4) Objects Falling from Above	Serious Injury / Death to people below work area.	A 2	- Use of Barricades / Caution Tape to cordon off danger zone below work area.	Foreman and All crew members	At Job Start up & duration of project.
(5) Other people/traffic on site	Collision with people/traffic	B 3	- Use of barricades / Caution tape to cordon off danger zone below work area.	Foreman and All crew members	At Job Start up & duration of project.
(6) Rigging	Pinching, lacerations, crushing & contusions.	B 2	- JP #24, #25, #26, #27. - SWP #19, #20, #21, #22, #23, #24. - Manufacturer's Instructions - OHS General Reg.'s Part XV	Foreman and All crew members	At Job Start up & duration of project.

Priority Ranking (ranking is the probability and severity of an accident if no controls are in place)

A Catastrophic	**B Critical**	**C Marginal**	**D Negligible**
1 Probable	**2 Reasonably Probable**	**3 Remote**	**4 Extremely Remote**

Critical Task (Equipment, Tools, Materials, Conditions)	Potential Health and Injury Hazards	Rank	Control(s) (Required Action)	Person Responsible	Date Completed
(6) Rigging	Severe injury or death from falling objects caused by equipment failure, error in	A 2	- JP #24, #25, #26, #27. - SWP #19, #20, #21, #22, #23, #24. - Sling/shackle/bolt load ratings.	Foreman and All crew members	At Job Start up & duration of project.
(7) Hoisting	Severe injury or death from falling objects caused by load shift, load swing	A 2	- JP #24, #25, #26, #27. - SWP #19, #20, #21, #22, #23, #24. - Training. Manufacturer's Instructions.	Foreman and All crew members	At Job Start up & duration of project.
(8) Housekeeping	Cuts, bruises, bodily injuries.	C 3	- SWP #25. - Keep tools organized & neat. Keep work area clean.	Foreman and All crew members	At Job Start up & duration of project.
(20) Waste Disposal	Inhalation of fumes, Skin/bodily injury/exposure, harmful environmental spills	B 3	JP #44. SWP #7, #11, #29, #30, #38 to #43, #58.	Foreman and All crew members	At Job Start up & duration of project.
(10) Slips and Trips	Cuts, bruises, bodily injuries, falls, serious injury.	B 3	- SWP #25. - Put power cords away when not in use. - Clean up debris and spills.	Foreman and All crew members	At Job Start up & duration of project.
(11) Moving parts of machinery	Injury due to contact with moving parts	B 3	- SWP #18 - Ensure all guards are in place.	Foreman and All crew members	At Job Start up & duration of project.
(12) Use of Kettle – Working with kettle at ground level	Burns, Fire, Explosion	B 2	- SWP 44 - Roofing Kettles - JP 50 - Roofing Kettle - Set-up-Use-Shut Down	Foreman and All crew members	At Job Start up & duration of project.
(6) Rigging	Severe injury or death from falling objects caused by equipment failure, error in	A 2	- JP #24, #25, #26, #27. - SWP #19, #20, #21, #22, #23, #24. - Sling/shackle/bolt load ratings.	Foreman and All crew members	At Job Start up & duration of project.

Priority Ranking (ranking is the probability and severity of an accident if no controls are in place)

A Catastrophic	**B Critical**	**C Marginal**	**D Negligible**
1 Probable	**2 Reasonably Probable**	**3 Remote**	**4 Extremely Remote**

Critical Task (Equipment, Tools, Materials, Conditions)	Potential Health and Injury Hazards	Rank	Control(s) (Required Action)	Person Responsible	Date Completed

Other considerations:

Priority Ranking (ranking is the probability and severity of an accident if no controls are in place)

A	**Catastrophic**	**B**	**Critical**	**C**	**Marginal**	**D**	**Negligible**
1	**Probable**	**2**	**Reasonably Probable**	**3**	**Remote**	**4**	**Extremely Remote**

Atlantic Roofers Limited North Shore Roofing Ltd Occupational Health & Safety Program	Date Last Revision: *Jan 2018*	Document No. **P-02-1**
	Title: **Roof Loading Assessment (RLA) (NB ONLY)** **Loading Pallets of Roofing Materials on Roof**	**Page 1 of 1**

(Applicable for roof slopes not exceeding 3:12 – Pallet minimum dimension 44" – Pallet maximum weight 2,900 lbs.)

Job Site Name: **Building Owner:**

Job Site Address:

Description of Roof Area:

Assessed By: _____ _____ _____

(Print) **(Sign)** **Date: (mm/dd/yyyy)**

Assessment Process – Step 1

Examine deck and supporting structure generally and interview owner for indications or reports of damage or deterioration.

☐ Damage/deterioration visually apparent or reported. – Do not apply any load to damaged/deteriorated areas until issue is assessed by a Professional Engineer and resolved.

☐ Where no damage/deterioration is visually apparent or reported or has been resolved – Proceed to **Step 2**

Step 2

Joist Direction Known?

☐ No → **Type Z Cribbing** must be provided under the load. Lay cribbing at 45 degrees to the roof end wall/edge to intersect the joists no matter which way they run. Cribbing to be minimum 16 feet long.

☐ Yes → Joist Span Known?

☐ Yes, _____ft. → Joist Spacing Known?

☐ No → Joist Spacing Known?

Joist Spacing Known?

☐ Yes, _____ft. → Deck Type Known?

☐ No → Deck Type Known?

Deck Type Known?

☐ Yes → Use Type X cribbing if required by Table A for joist spacing less than 4'. Type Y cribbing is required if joist spacing is more than 4'. Table B is not applicable.

☐ No → Use Type X cribbing if required by Table A for joist spacing less than 4'. Type Y cribbing is required if joist spacing is more than 4'. Table B is not applicable.

☐ Yes → Use 2' joist spacing in Table A. Refer to Table B for cribbing requirement due to deck type.

☐ No → Type Y cribbing is required. Tables A and B are not applicable. Go to Step 5.

☐ Yes → Use 10' joist span in Table A. Refer to Table B for cribbing requirement due to deck type.

☐ No → Use Type X cribbing for joist spacing less than 4'. Type Y cribbing is required if joist spacing is more than 4'. Table B is not applicable.

☐ No → Use Type Y cribbing is required. Tables A and B are not applicable. Go to Step 5.

Step 3 – Table A – Structure

Joists Spacing (ft.)	10	12	14	16	18	20	24	26	28	30	32	34	36
2													
3													
4													
5													
6													
7													
8													
9													
10													

Type X Cribbing Required

Cribbing May Not be Required Depending on Deck Type See Table B

Assumptions for table A:

1. Based on *40 psf roof live load.*
2. Assumed pallet size is 44 inch square x 2900 lb.
3. **Cribbing Requirements Apply.**

Note – Light Weight Loads

Pallets/Materials imposing a loading of less than 40 psf may be placed directly on the roof without assessing the roof strength *provided* that there is no indication of damage or deterioration to the supporting deck or structure.

Step 4 – Table B – Deck Type

☐ **1.5" steel** – If joists are spaced more than 5 feet on center, support load on Type Y Cribbing
☐ **3" steel** – If joists are spaced more than 8 feet on center, support load on Type Y Cribbing
☐ **Siporex/Fiber Cement** – Support load on Type Y Cribbing
☐ **Plank** – Typically 38mm, 64mm, or 89mm thick.
- ☐ 38mm thick planks – If joists are spaced more than 5 feet on center, support load on Type Y Cribbing
- ☐ 64mm thick planks – If joists are spaced more than 8 feet on center, support load on Type Y Cribbing
- ☐ 89mm thick planks – If joists are spaced more than 10 feet on center, support load on Type Y Cribbing

☐ **Plywood/OSB/Board** – If joists are spaced more than 4 feet on center, support load on Type Y Cribbing
☐ **Concrete** – If span between slab supports is more than 6 feet, support load on Type Y Cribbing

Step 5 – Required Roof Loading Protocol (Identify appropriate requirement based on the above Assessment)

☐ **Cribbing Not Required:** No Cribbing is needed to spread out the pallet load.
☐ **Type X Cribbing:** 8' minimum length cribbing to be laid perpendicular to the joists.
☐ **Type Y Cribbing:** 8' minimum length cribbing to be laid perpendicular to the joists. Cribbing to span and to be centered across two or more joists or, if not possible to confirm, use 16' minimum length cribbing laid perpendicular to the joists.
☐ **Type Z Cribbing:** 16' minimum length cribbing to be laid diagonally (45°) to the roof end wall/edge.

Cribbing Requirements (Applicable to all cribbing types):

1. Cribbing to be minimum 6" x 6" SPF # 2, length as indicated. Two pieces of cribbing per pallet.
2. Cribbing to be placed in such a way that any one joist gets load from one pallet only. Cribbing for different pallets must not extend over the same joist.
3. Pallets are to be positioned near the center of the length of the cribbing in all instances.

Atlantic Roofers Limited North Shore Roofing Ltd Occupational Health & Safety Program	Date Last Revision: *Jan 2018*	Document No. **F-02-2**
	Title: **Fall Protection Plan (FPP)**	**Page 1 of 2**

Planning plays a key role in protecting workers from fall hazards. The fall protection plan shall be:

- Designed and completed to address site-specific conditions
- If project is not completed on consecutive days a new FPP and ERP Orientation must be completed
- All employees will sign the Emergency Response Orientation acknowledging the FPP has been reviewed prior to starting work

Job Site Name:	Start Date:
Job Site Address:	Expected Duration:
Contact Person (Project Manager):	Phone #:

Nature/Description of Work to be Done:

_____

_____

_____

_____

Weather Conditions:

Temperature: _____

Sunny ☐ Rain ☐ Cloudy ☐ Snow ☐ Freezing Rain ☐

Wind: _____ (km/Hr) Direction: _____

Wind Chill Factor: _____

Potentially Dangerous Primary Tools and Equipment to be used

Hoist	☐	Roof Cutter	☐	Torch & Propane	☐	Hot Lugger	☐
Power Buggy	☐	Roof Remover	☐	Tar Supply Line	☐	_____	☐
Roof Blower	☐	Roof Sweeper	☐	Torch & Propane	☐	_____	☐

Fall Hazards Anticipated

Uncovered Openings	☐	Poor Housekeeping	☐
Surface or Item that can cause injury to person(s)	☐	3m (10') above a safe surface	☐
Pit or Vat	☐	Access & Egress	☐
Exposed Hazardous Material	☐	_____	☐

Hazardous Activities

Cleaning	☐	Electrical Tool Use	☐
Cutting	☐	Torch Use	☐
Mopping Asphalt	☐	Powered Equipment Use	☐
Caulking	☐	Installing Metal Flashings	☐

Roof Loading Assessment Completed? (Form P-02-2) (Attach to this form) Yes ☐ No ☐

Fall Protection System / Control to be Used

Fall Protection System(s) to be used (to be considered in the following priority order):

- ☐ Temporary Guardrail System
- ☐ Travel Restraint System
- ☐ Roofing Platform
- ☐ Fall Arrest System
- ☐ Control Zone with Safety Monitor

Name of Safety Monitor: _____

Phone Number: _____

Anchorages to be used:

- ☐ Permanent Existing Anchors
- ☐ Temporary Roof Anchors
- ☐ OWSJ
- ☐ PR 600 Mobile Fall Protection System
- ☐ PR 2000 Roofing Platform
- ☐ SALA Freestanding Counterweight Anchor
- ☐ Horizontal Lifeline

Clearance Distance from work area to safe surface

Height of worker: 6 feet (not less than 6 feet per worker)	6
Lanyard Length	____
Lanyard Expansion	4
Safety Factor: 3 feet	3
Total	
Actual Distance from work area tie off to Safe Surface	

Swing Fall Procedure

Consider swing fall hazard when selecting an anchor point. In situations where swinging cannot be avoided, but where several equally good anchor points are available, the anchor point selected should direct the swing fall away from objects rather than into them. Where there is a choice of anchor points, the one offering the least amount of swing should be selected.

Atlantic Roofers Limited North Shore Roofing Ltd Occupational Health & Safety Program	Date Last Revision: *Jan 2018*	Document No. **F-02-2**
	Title: **Fall Protection Plan (FPP)**	**Page 2 of 2**

Job Site Name: **Start Date:**

Job Procedures to be used (✓)

Select specific Job Procedures to be used to: assemble, maintain, inspect, use, and disassemble.

- ☐ JP # 54 – Fall Protection- Control Zone (NL Only)
- ☐ JP # 55 – Fall Protection- Rescue Procedures – Option A
- ☐ JP # 55 – Fall Protection- Rescue Procedures – Option B
- ☐ JP # 55 – Fall Protection- Rescue Procedures – Option C
- ☐ JP # 55 – Fall Protection- Rescue Procedures – Option D
- ☐ JP # 12 – Fall Protection-Code of Practice
- ☐ JP # 13 – Fall Protection-Fall Arrest System Use
- ☐ JP # 14 – Fall Protection-Pre-Engineered Horizontal Lifeline Use
- ☐ JP # 15 – Fall Protection-Railguard 200 Installation
- ☐ JP # 16 – Fall Protection-Railguard 200 Use for Travel Restraint
- ☐ JP # 17 – Fall Protection – PR 2000 Roofing Platform
- ☐ JP # 18 – Fall Protection-PR 600 Mobile Fall Protection System
- ☐ JP # 19 – Fall Protection-Safety Monitor / Control Zone Use
- ☐ JP # 20 – Fall Protection-Vertical Lifeline Use
- ☐ JP # 38 – Rescue-DBI Rollgliss Rescue Kit for Fallen Worker

All Fall Protection equipment shall be inspected by each user daily, before use.
All Employees are responsible to ensure this is done daily.

Formal inspections shall be conducted, at minimum, once per year arranged by the Safety Coordinator.
Each employee is responsible to ensure that tags have valid inspection dates recorded.

Weather Conditions

When weather conditions are checked off as a hazard no roof work will be performed. Check (✓) as appropriate:

- ☐ **When ice exists that cannot be eliminated / cleaned away.**
- ☐ **When steady winds are over 40 km/h.**
- ☐ **When wind gusts are over 60 km/h.**

Rescue

Procedures for rescue of a worker who has fallen and is suspended by a personal fall protection system, but is unable to self-rescue.

Rescue Ladder	☐	**Remote Rescue Kit**	☐	_____	☐
Pull Casualty in Through Window / Balcony	☐	**Suspended Access Equipment**	☐	_____	☐
Aerial Equipment from Ground	☐	**Crane Man Basket**	☐	_____	☐

Backup Contractor Aerial Lift ☐ Contractor Signature: _____ Date: _____

Training & Review

Are all workers trained in Fall Protection? (Valid certificates on hand?)	☐	**Yes**	☐	**No**
Has Fall Protection Plan been reviewed in the Site Safety Orientation by all crew?	☐	**Yes**	☐	**No**

Fall Protection Plan has been communicated to all affected employees who are involved in the work at height as indicated and signed by employees on Form F-12-1 "Emergency Response Orientation."

Foreman:

_____	_____	_____
(Print)	**(Sign)**	**Date: (mm/dd/yyyy)**

Project Manager:

_____	_____	_____
(Print)	**(Sign)**	**Date: (mm/dd/yyyy)**

*** Regulatory Reference**

- **NB OHSA & Reg 91-191, (July 1, 2011) Part VII, Section 49, 49.1 to 49.8, 50, 50.1 to 50.5 REGULATION 2010-159 under the OCCUPATIONAL HEALTH AND SAFETY ACT (O.C. 2010-495) (Aug 31, 2010)**
- **NS OHSA & Reg S.N.S 1996, c.7, (June 12, 2013) Part 21, Workplace Health and Safety Regulations made under Section 82 of the *Occupational Health and Safety Act* S.N.S. 1996, c. 7 O.I.C. 2013-65 (June 12, 2013), N.S. Reg. 52/2013**
- **PE OHSA General Regs EC180/87; 43/06, (Jan, 2013) Part 23, Section 23.7, CHAPTER O-1.01 OCCUPATIONAL HEALTH AND SAFETY ACT FALL PROTECTION REGULATIONS (June 9, 2012)**
- **NL OHSA & Reg 5/12, (Jan 2012) Part V, Section 28, 29, 30, Part X, Section 138 to 146, Part XI, Section 197, 207, 217, 242, 247**

An example of the Large Job Daily Field Level Rick Assessment can be seen below. This assessment will be completed during the site orientation on the fist day at the job site prior to any work commencing. Any risks will be identified and reviewed with all workers at the job site. This report will also be completed if site conditions change.

Form: Large Job Daily Field Level Risk Assessment (FLRA)

Project Name:	☐Day 1	☐Other	☐Ongoing	**Date:**	**# in Crew:**
Project Location:					
Crew Members:					
Contact/Project Manager:				**Phone#:**	
Brief Description of Today's Tasks :					
Muster Point:				**Emergency Comm. Equip:**	☐Cell ☐ Radio

Must Be Completed Prior to 1st Day On Jobsite or If Site Conditions Change?	Y	N/A	Must be Completed Daily Prior to Job Start?	Y	N/A	Has the Following Risk(s) been Considered and Reviewed with Workers –(✓) if applicable	(✓)
Pre-Job Hazard Assessment complete?	☐	☐	PPE visually Inspected Prior to use by all Workers?	☐		Slips/Trips	
Roof Load Assessment complete?	☐	☐	Work area Inspected and clean?	☐		Fall from Heights/Same Elevation	
Fall Protection Plan complete?	☐	☐	Tele handler/forklift inspected?	☐	☐	Skylights / Holes	
Site orientation completed by all workers?	☐	☐	SDS reviewed with/by Workers? (If Required)	☐	☐	Lifting/Carrying/Pushing/Pulling/ Over Reaching	
Emergency Response Plan/Contact Numbers on site?	☐	☐	Hoist Weighted Properly/ Counterweights Secured?	☐	☐	Bending/Twisting/Squatting	
Work permits on hand?	☐	☐	Hoist & Rigging inspected?	☐	☐	Cuts / Sharp Edges / Pinch Points	
Job Specific Safe work/job practices available for review?	☐	☐	Lift zone in place and controlled?	☐	☐	Falling Items / Tools / Materials	
Roof hoist Inspected and Installed Properly?	☐	☐	Aerial lift inspected prior to use?	☐	☐	Others Working Overhead/Below	
Workers Have all Required PPE for Job?	☐	☐	Weather conditions causing safety concerns?	☐	☐	Fire / Flammables	
Workers properly trained and competent in tasks being performed	☐		Ladders Inspected/ Tied off / Proper angle/3ft above edge	☐		Inhalation of Fumes/Dust	
Job scope/tasks understood by Everyone?	☐		Job Tasks Changes Communicated to Workers and Understood?	☐		Gas Cylinder leaks/explosion	
Guardrails Installed Correctly	☐	☐	Work permit Received & signed off?	☐	☐	Compression/Tension	
	☐	☐	Fire Watch in Place and Documented?	☐	☐	Rotating/Moving Equipment	
	☐	☐		☐	☐	Line of Fire (Caught/Crushed)	

Hazard Elimination - circle if applicable					
Guardrails Installed Correctly(Pins in)	A1	Roof Perimeter Warning System	A1	Fall Protection System Identified	A1
Barricades / Flagging & Tagging	C2	Anchor Points Identified/Adequate	A1	Competent Kettle Operator In Place	B2
Hole Coverings Installed/Marked	A1	Competent Safety Monitor Identified	B3	First Aid Kit / Burn Kit Present on Same Level	C3
Propane Tanks Secured	B2	All Workers Wearing Appropriate PPE	B1	Fire Extinguisher(s) Present on Same Level	B3
Competent Signaller Identified	B2				

New Hazard Recognition		
OTHER/NEW IDENTIFIED TASKS	IMMEDIATE HAZARDS	HAZARD ELLIMINATION - CONTROLS

Supervisor End of Shift Summary - (✓) for YES – (X) for NO (NA) Not Applicable					
All workers in attendance and accounted for at end of shift?		Is your site housekeeping completed to standards?		Are tools and equipment safe and secure?	
There were no workplace injuries today?		Did you sign off the permit today?		Has the ladder/lift been taken down and secured?	
Were any Near Losses or hazards reported today?		Have you planned for tomorrow's permit?		Are all PPE Properly stored and Protected from Damage?	

If an injury has ocured, form F-10-1 (Incident Report) must be submitted for each injury by days end to the office.

I confirm that this document has been completed properly and all workers have been accounted for throughout the shift.
I also confirm that I have reviewed this document with all workers, prior to the start of shift, as well as any changes that occurred

Supervisor Signature	**Shift Start:**		**Shift End:**	

Atlantic Roofers Limited North Shore Roofing Ltd Occupational Health & Safety Program	Date Last Revision: Jan 2018	Document No. S-02-1
	Title: Annual Review Comprehensive Hazard Assessment	Page 1 of ____

Assessment Team: _____

Date of Assessment: _____

Hazard Category	Tasks/Issues	Priority Ranking	Control(s)	Person Responsible	Target CompetionDate	Completed Date

Other considerations:

Priority Ranking (ranking is the probability and severity of an accident if no controls are in place)

A	**Catastrophic**	**B**	**Critical**	**C**	**Marginal**	**D**	**Negligible**
1	**Probable**	**2**	**Reasonably Probable**	**3**	**Remote**	**4**	**Extremely Remote**

118 Cocagne Cross Road
Cocagne, NB E4R 2J2
Tel.: (506) 576-6683 Fax: (506) 576-9714

INVENTORY FORMS

Section 2.3

Atlantic Roofers Limited North Shore Roofing Ltd Occupational Health & Safety Program	Date Last Revision: *Jan 2018*	Document No. **S-02-2**
	Title: **Critical Task Inventory**	**Page 1 of __**

Critical Task: Task or procedure, which is critical to the completion of the job and involves the potential for loss to people, product, process or profit.

Supervisor: _____ **Area:** _____ **Date:** _____

Tasks / Equipment / Tool	Hazards	Controls

Atlantic Roofers Limited North Shore Roofing Ltd Occupational Health & Safety Program	Date Last Revision: *Jan 2018*	Document No. **S-02-3**
	Title: **Controlled Product Inventory**	

Supervisor: _____ Area: _____ Date: _____

Product Name	Properly Labelled?	MSD Sheet Expiry Date:	Located:

Atlantic Roofers Limited North Shore Roofing Ltd Occupational Health & Safety Program	Date Last Revision: *Jan 2018*	Document No. **S-02-4**
	Title: **Tool & Equipment Inventory**	**Page 1 of __**

Supervisor: _____ **Area:** _____ **Date:** _____

Tool Name	Model #	Serial #	User Guide Available

2.4 Section 2 Proof of Review

Section / Form	Development			Revised			Reviewed		
	Date		By Whom	Date		By Whom	Date		By Whom
	M	Y		M	Y		M	Y	
2.1	03	05	Br. Mgrs	04	18	E Joy	01	19	JHSC
2.2	03	05	Br. Mgrs	04	18	E Joy	01	19	
2.2.1	03	05	Br. Mgrs.	04	18	E Joy	01	19	
2.2.2	03	05	Br. Mgrs.	04	18	E Joy	01	19	
F-02-1	03	05	Br. Mgrs	04	18	E Joy	01	19	
P-02-1	01	14	Y. Bradet	04	18	E Joy	01	19	
F-02-2	01	14	T. Firth	04	18	E Joy	01	19	
F-02-3	03	05	Br. Mgrs	04	18	E Joy	01	19	
S-02-1	03	05	Br. Mgrs	04	18	E Joy	01	19	
2.3	03	05	Br. Mgrs	04	18	E Joy	01	19	
S-02-2	01	14	T. Firth	04	18	E Joy	01	19	
S-02-3	01	14	T. Firth	04	18	E Joy	01	19	
S-02-4	01	14	T. Firth	04	18	E Joy	01	19	

118 Cocagne Cross Road
Cocagne, NB E4R 2J2
Tel.: (506) 576-6683 Fax: (506) 576-9714

SAFE WORK PRACTICES

SECTION 3

Section 3

Safe Work Practices

3.1 Safe Work Practice Policy……3.3

3.2 Safe Work Practices……3.5

3.3 Safe Work Practice Proof of Review……3.95

118 Cocagne Cross Road
Cocagne, NB E4R 2J2
Tel.: (506) 576-6683 Fax: (506) 576-9714

SAFE WORK PRACTICE POLICY

Section 3.1

Safe Work Practice Policy

Purpose

To provide Atlantic Roofers Limited/North Shore Roofing Ltd. employees with the skills and knowledge required to develop safe work practices around hazardous conditions in company offices and job sites. They are used to train new employees and workers that moved to new jobs and are also used as references, especially for complex job, particularly hazardous jobs, or for jobs that are not done very often.

Policy

Safe Work Practices are a set of positive guidelines concerning the performance of a specific task that may not always be completed in a certain way. Safe work practices are a way of controlling hazards and performing job with a minimum risk to people, process, environment and property.

The most applicable and critical safe work practices will be written in an easy to understand format readily available to every supervisor, employee, or general public for regular use on all job sites or grounds. The process of developing new or modifying existing, safe work practices must ensure that the guidelines governing conduct for specific work activities meet or exceed applicable industry standards and all provincial, federal and/or state acts, regulations, policies and/or legislation.

Responsibilities

Management
Atlantic Roofers Limited/North Shore Roofing Ltd. is responsible to ensure that existing safe work practices remain current and meet requirements of the work and regulations, supervisors, and employees may be involved in the process of reviewing the most applicable critical safe work practices

Supervisors
Supervisors are responsible for the review of safe work practices in response to changes in legislation, changes in industry standards, or accident/incident investigations.

Employees
Employees are responsible to read, understand and comply with all company policies, procedures, and rules.

Yves Bradet, General Manager
Atlantic Roofers Limited

Jan 14/19
Date

Terry Casey, General Manager
North Shore Roofing Ltd.

Jan 14/19
Date

118 Cocagne Cross Road
Cocagne, NB E4R 2J2
Tel.: (506) 576-6683 Fax: (506) 576-9714

SAFE WORK PRACTICES

Section 3.2

Safe Work Practice Index

SWP #	Safe Work Practice Name
SWP #1	Air Powered Hand Tools
SWP #2	Asbestos
SWP #3	Back Care & Manual Lifting
SWP #4	Compressed Gas – Cylinder Handling and Storage
SWP #5	Compressed Gas – Leaking Cylinders
SWP #6	Compressed Gas – Regulator Set Up and Use
SWP #7	Cleaning Solvents
SWP #8	Driving – Cell Phone Usage
SWP #9	Driving – Company Vehicles
SWP #10	Driving – Winter Condition
SWP #11	Dust
SWP #12	Electrical Safety
SWP #13	Extension Cords
SWP #14	Fall Protection
SWP #15	Fire Extinguishers
SWP #16	Flammable Liquids – Filling Portable Containers
SWP #17	Flammable Liquids – Transportation
SWP #18	Guards – Machinery and Equipment
SWP #19	Hoisting – Crane
SWP #20	Hoisting – Clips and Clamps
SWP #21	Hoisting – Hand Signals
SWP #22	Hoisting – Manual Material Hoist
SWP #23	Hoisting – Rigging
SWP #24	Hoisting – Use of Shackles
SWP #25	Housekeeping
SWP #26	Ladders – Portable
SWP #27	Ladders – Extension
SWP #28	Ladders – Step
SWP #29	Materials – Handling / Storage / Transportation
SWP #30	Materials – Hazardous
SWP #31	Mobile Equipment – Elevating Platforms
SWP #32	Mobile Equipment – Forklifts
SWP #33	Mobile Equipment – General Operation
SWP #34	Mobile Equipment - Refueling
SWP #35	Mobile Equipment – Traffic Flow on Work Sites
SWP #36	Office Safety
SWP #37	Power Press / Brake Presses / Shears
SWP #38	PPE – Eye Protection
SWP #39	PPE – Foot Protection
SWP #40	PPE – Hand Protection
SWP #41	PPE – Head Protection
SWP #42	PPE – Hearing Protection
SWP #43	PPE – Respiratory Protection
SWP #44	Roofing Kettles
SWP #45	Saw – Chain Saw
SWP #46	Saw – Circular Saws
SWP #47	Saw – Sabre / Jig / Reciprocating
SWP #48	Scaffolds – Metal
SWP #49	Spray Painting

SWP #50	Tagging and Lockout
SWP #51	Thermal Exposure – Cold
SWP #52	Thermal Exposure – Heat
SWP #53	Tiger Torch – Safe Handling
SWP #54	Tools – Defective
SWP #55	Tools – Hand Held Power Tools
SWP #56	Tools – Pneumatic Nailing and Stapling
SWP #57	Tools – Portable Grinders
SWP #58	WHMIS
SWP #59	Working Alone
SWP #60	Material – Securing
SWP #61	Fire Watch

Air Powered Hand Tools

General

Air-powered tools include nailing and stapling guns, grinders, drills, jack hammers, chipping hammers, riveting hammers and wrenches.
Air powered tools present many of the same hazards as their electronically powered counterparts, plus hazards you may not have considered.

Hazards Present

• Cuts and Amputations	• High Noise Levels Resulting in Hearing Loss	• Contusions
• Flying Objects/Particles	• Repetitive Strain Injuries	• Electrocution

Protective Mechanisms

• Eye Protection	• Safety Shoes	• Hearing Protection
• Hand Protection	• Manufacturers Recommendations	

Do

- DO wear all PPE, including gloves, safety glasses and footwear, hearing protection.
- DO make sure hose connections fir properly and are equipped with mechanical means of insuring connection (chain or wire).
- DO install quick disconnects of a pressure release type rather than disengagement type. Attach the male end of connector to the tool NOT the hose.
- DO turn off air pressure to hose when not in use or when changing power tools.
- DO check hose regularly for cuts, bulges and abrasions. Replace if defective.
- DO blow out airline before connecting tool, hold hose firmly and blow away from yourself and others.
- DO choose air supply hoses that have a minimum working pressure rating of 1035 kPa (150 psig) or 150% of the maximum pressure produced in the system, whichever is greater.
- DO reduce operator fatigue. Support heavy tools by means of counter balance wherever possible.

Do Not

- DO NOT create tripping hazards by laying hoses across walkways or curled underfoot.
- DO NOT use compressed air to blow debris or to clean dirt from your clothes, or those of others.
- DO NOT operate at a pressure above manufacturer's rating.

Supervisor Responsibility

- Supervisors are responsible to facilitate and/or provide proper instruction on PPE and training in accordance with the manufacturer's instructions
- Compliance and Enforcement
- Ensure that tools are properly maintained

Employee Responsibility

- Anticipate all work hazards
- Ensure that all safeguards are utilized
- Inspect tools prior to use to ensure that tools are in proper working order
- Report to the supervisor any tool that needs to be repaired/replaced
- Follow all safety guidelines for the use of hand/power tools and according to manufacturer's instructions
- Participate in training provided by the company

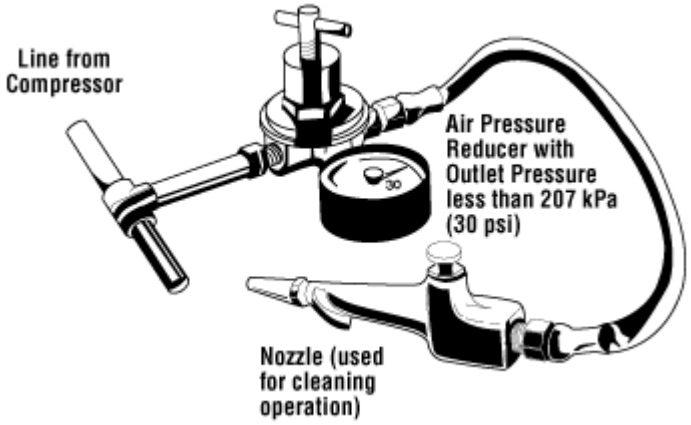

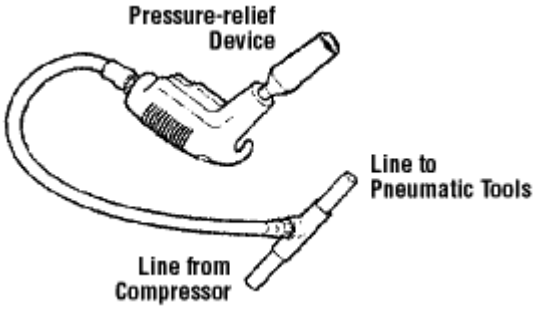

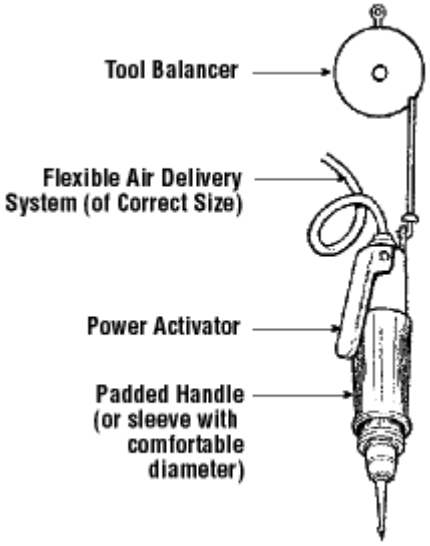

*** Regulatory Reference**
NB OHSA & Reg 91-191 (v. Jul 1, 2011) Part IX-80 to 86 Tools,
NS OHSA & Reg S.N.S 1996, c.7 (v. June 12, 2013) Part 8-101 Compressed air used for cleaning, Part 9 Tools
PE OHSA General Regs EC180/87; 43/06 (v. Jan, 2013) Part 29 Hand Tools & Portable Power Tools
NL OHSA & Reg 5/12 (v. Jan 2012) Part V, Section 26(4), Part VIII, Section 111, Part XII, Section 268

The information contained in this publication is intended for general use and may not apply to every circumstance. It is not a definitive guide to government legislation and does not relieve persons using this publication from their responsibilities under the Workplace Safety and Health Act or applicable legislation.
The appropriate regulations and statutes should always be consulted and adhered to. Atlantic Roofers Limited/North Shore Roofing Ltd. and its affiliates do not guarantee the accuracy of, nor assume liability for the information presented here.

General

Asbestos is a naturally occurring material once used widely in the construction industry. It's strength, ability to withstand high temperatures, and resistance to many chemicals made it useful in hundreds of applications. However when asbestos is inhaled, it can be harmful and lead to the following diseases:

- Asbestosis (scarring of lung tissue)
- Lung cancer
- Mesothelioma (cancer of the lining of the chest and/or abdomen)

Hazards Present

- Inhalation

Protective Mechanisms

- Eye Protection
- Hand Protection
- Respiratory Protection
- Disposable clothing
- Manufacturers Recommendations

Do

- DO work in a well-ventilated area and, where possible, in the open air (but not on windy days)
- DO thoroughly wet down the material before you start and regularly during the work by lightly spraying surfaces with water or a 1:10 polyvinyl acetate (PVA): water solution, or with low-pressure water from a garden hose (if outdoors); keep it wet until packaged for transport
- DO use non powered hand tools (e.g. a guillotine, hand saw or hand powered drill) as these generates smaller amounts of dust and waste chips that are coarser than those generated when using power tools
- DO inform neighbors of the proposed work, and advise them to close doors and windows while the work is being undertaken
- DO keep visitors away until the work is completed (use barricades and signs if necessary)
- DO remove ALL protective wear and dispose of with other asbestos waste

Do Not

- DO NOT work with asbestos on a windy day
- DO NOT reuse or recycle asbestos waste
- DO NOT dump asbestos waste illegally
- DO NOT spread asbestos dust through areas of the building that are not protected by plastic sheeting
- DO NOT use high pressure water jets to wet surfaces as this may increase the spread of loose fibres or dust
- DO NOT walk on corrugated asbestos cement roofs – many people have been injured by falling through while attempting to treat or repair roof surface
- DO NOT wet down roofing sheets if this creates a high risk of slipping off a roof

Supervisor Responsibility

- Prior to commencing work in any area, request a copy of the owner's Asbestos Report
- If there is asbestos in the work area and it needs to be removed to perform the work, request that the owner remove it
- Do not commence work until you have received a notice from the owner in writing that the asbestos has been removed and it is safe to commence or return to work
- If there is asbestos in the work area and its presence does not impact the work, advise workers of location and what not to disturb

Employee Responsibility

- In all projects, bear in mind the possible presence of asbestos
- If you are working in an area known to contain asbestos, contact your supervisor to determine whether or not asbestos is present in the work area or adjacent areas in which you may be working
- If there is any doubt about pipe or duct insulation, textured ceilings, vinyl asbestos floor tile, flooring sheet goods, wall cladding or underground piping, especially in older facilities, do not commence work and notify your supervisor

Note: To remove Asbestos a worker requires knowledge of the type of asbestos, knowledge of the proper choice and use of PPE and Respirators, understanding of containment procedures and knowledge of proper handling, storage and waste removal procedures. For type 3 removals, training is a legal requirement.

DO NOT REMOVE OR DISTURB ASBESTOS CONTAINING MATERIAL. IF YOU ARE INSTRUCTED TO DO SO, STOP WORK AND CONTACT YOUR SUPERVISOR.

*** Regulatory Reference**
NB OHSA & Reg 92-106 (v. Mar, 1992) Code for Practice for Working with Material Containing Asbestos
NS OHSA & Reg 53/95 (v. Apr 11, 1995) made under Section 84 of the Environment Act
PE OHSA General Regs (v. 2013) EC180/87; 43/06, Part 49
NL OHSA & Reg 5/12, (v. Jan 2012) Part VI, Section 48

The information contained in this publication is intended for general use and may not apply to every circumstance. It is not a definitive guide to government legislation and does not relieve persons using this publication from their responsibilities under the Workplace Safety and Health Act or applicable legislation.
The appropriate regulations and statutes should always be consulted and adhered to. Atlantic Roofers Limited/North Shore Roofing Ltd. and its affiliates do not guarantee the accuracy of, nor assume liability for the information presented here.

Back Care and Manual Lifting

General

Most lifting accidents are due to improper lifting methods. All manual lifting should be planned and safe lifting procedures followed.

Hazards Present

- Back Strain
- Lower Limb Disorders
- Damage to Musculoskeletal System
- Cuts, bruises, fractures
- Neck & Upper Limb Disorders
- Acute Trauma

Protective Mechanisms

- PPE
- Safe Lifting Procedures
- Safe Job Procedure
- Training
- ERP (Emergency Response Plan)

Do

- DO tuck in the chin to keep the back as straight as possible while lifting
- DO lift with the strong leg muscles
- DO use mechanical equipment to move heavy items when possible (loaders, forklifts & hoists)
- DO keep reach to a minimum and lift as close to your body as possible
- DO ask for help with heavy, awkward items

Do Not

- DO NOT use your back muscles to do lifting
- DO NOT try to lift an item that is too heavy or awkward
- DO NOT twist your body while carting an object
- DO NOT attempt team lifting without proper coordination
- DO NOT overexert

Team Lifting

If the weight, shape or size of an object makes it tough for one person to handle, team up. Workers should be close to the same size for team lifting. One worker should be responsible for control of the action to ensure proper coordination. Work together! Injuries can happen if one of you lifts too soon, shifts the load, or lowers it improperly.

Good Handling Technique for Lifting

- Remove obstructions from the route
- For a long lift, plan to rest the load mid-way on a table or bench to change grip
- Keep the load close to the waist. The load should be kept close to the body for as long as possible while lifting
- Keep the heaviest side of the load next to the body
- Adopt a stable position and make sure your feet are apart, with one leg slightly forward to maintain balance

Supervisor Responsibility

- Supervisors are responsible to facilitate and/or provide proper instruction to their workers on protection requirements and training
- Selection of lifting equipment

Employee Responsibility

- Ensure that you know your physical limitations and the approximate weight of materials
- The use of power equipment or mechanical lifting devices should be considered and employed where practical
- Obtain assistance in lifting heavy objects
- Ensure a good grip before lifting and employ proper lifting technique
- Avoid reaching out
- Pipes, conduit, reinforcing rods and other conductive materials should not be carried on the shoulder near exposed live electrical equipment or conductors
- Be aware of hazardous and unsafe conditions

*** Regulatory Reference**
WorksafeNB "Ergonomics Guidelines for Manual Handling" (2nd Edition 2010)
WorksafeNS (Published in 2008) "Sprains and Strains"
PE Safety Matters Fact Sheet (Printed Nov 2008) "Strain/Sprain-Low Back"
NL OHSA & Reg 5/12, (v. Jan 2012) Part VI, Section 56

The information contained in this publication is intended for general use and may not apply to every circumstance. It is not a definitive guide to government legislation and does not relieve persons using this publication from their responsibilities under the Workplace Safety and Health Act or applicable legislation.
The appropriate regulations and statutes should always be consulted and adhered to. Atlantic Roofers Limited/North Shore Roofing Ltd. and its affiliates do not guarantee the accuracy of, nor assume liability for the information presented here.

Compressed Gas - Cylinder Handling & Storage

SWP #4

General

Compressed gas cylinders are used in a variety of tasks. While the tasks and gases may vary, the hazards and safe operation and handling practices for gas cylinders are similar. By following the safe work practices listed below, you can help reduce the risk of injuring yourself or others while using and handling this equipment.

Hazards Present

• Fire	• Explosion	• Corrosion

Protective Mechanisms

• Eye Protection	• Respiratory Protection	• Manufacturers Recommendations
• Hand Protection	• WHMIS Training	• Safe Work Practice

Do

- DO ensure there is clear labeling appears on each cylinder stating the contents in accordance with WHMIS legislation
- DO store cylinders upright and in a dry, well-ventilated area away from doors, stairs, elevator shafts, traffic, and heat sources. **Propane cylinders should always be kept upright.**
- DO ensure cylinders are not secured to equipment that could become part of an electrical circuit
- DO post a "No Smoking" sign near the storage area
- DO keep full cylinders separated from empties
- DO properly secure cylinders to keep them from falling during storage, transportation, and use.
- DO use proper moving equipment like dollies or lifting cradles, or ask for assistance if equipment is not available. Gas cylinders can be very heavy, and they can be very dangerous if handled incorrectly
- DO remove the regulator and replace the cap, if applicable, before moving cylinders
- DO keep the valve keys or wrenches with the cylinders so they can be closed quickly if needed

Do Not

- DO NOT rely on the color of the cylinder for identification. Color coding is not reliable because cylinder colors may vary with the supplier
- DO NOT slide, drag, or drop cylinders
- DO NOT use a leaky cylinder. Notify your supervisor and the supplier

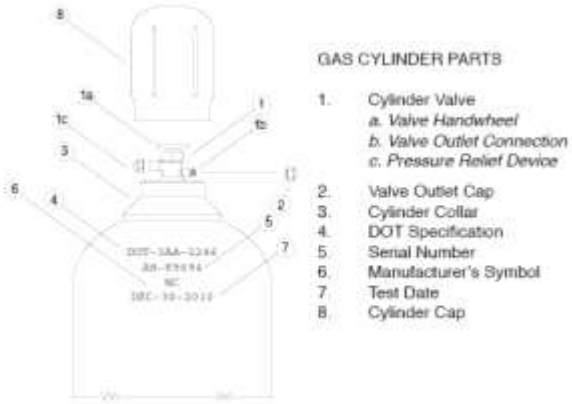

Supervisor Responsibility

- Supervisors are responsible to facilitate and/or provide proper instruction on PPE and training
- Enforcement
- Compliance

Employee Responsibility

- Ensure you are trained in the use and handling of compressed gas cylinders
- Take special precautions when working with and around this kind of equipment
- Check valves for leaks using a soapy liquid around the valve connection
- Store different gases separately and isolated from other flammables such as gasoline

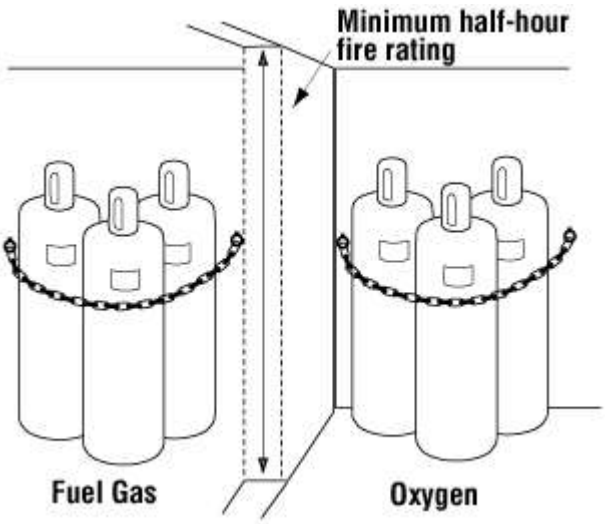

TRANSPORT cylinders in an upright position, secured on a vehicle or trolly designed for that purpose.

*** Regulatory Reference**
NB OHSA & Reg 91-191, (Jul 1, 2011) Part VIII, Section 74 to 79
NS OHSA & Reg S.N.S 1996, c.7, (Jun 12, 2012) Part 5, Section 45 to 49
PE OHSA General Regs EC180/87; 43/06, (Jan, 2013) Part 37
NL OHSA & Reg 5/12, (Jan, 2012) Part XXI, Section 450

The information contained in this publication is intended for general use and may not apply to every circumstance. It is not a definitive guide to government legislation and does not relieve persons using this publication from their responsibilities under the Workplace Safety and Health Act or applicable legislation.
The appropriate regulations and statutes should always be consulted and adhered to. Atlantic Roofers Limited/North Shore Roofing Ltd. and its affiliates do not guarantee the accuracy of, nor assume liability for the information presented here.

General

Cylinder leaks usually occur at welded seams (on low pressure cylinders) or at the cylinder valve. Proper quality control of materials and inspections lessen the probability of cylinder leaks.

Hazards Present

• Fire	• Explosion	• Corrosion

Protective Mechanisms

• Eye/Hand Protection	• ERP (Emergency Response Plan)	• Manufacturers Recommendations
• Respirator	• WHMIS Training	• Safe Work Practice

Do	**Do Not**
• DO check equipment regularly and every time it is set up for gas leaks at cylinder valves, regulators and connections	• DO NOT rely on the color of the cylinder for identification. Color coding is not reliable because cylinder colors may vary with the supplier
• DO use soapy water (non-fat solution), approved leak-test solution, or detection equipment to check for gas leaks	• DO NOT use a flame to check for gas leaks
• DO attach a regulator to temporarily stop a leak through the cylinder valve	• DO NOT use a leaky cylinder. Notify your supervisor and the supplier
• DO attach a tag stating that the container is defective if a leak cannot be stopped by tightening the valve or packing nut	• DO NOT ship leaking cylinders
• DO wear a gas mask or self-contained breathing apparatus if the gas is toxic	• DO NOT repair equipment under pressure

4 Distinct areas where leaks at the cylinder valve occur:

- **Valve Threads –** where the valve screws into the cylinder (commonly referred to as "neck leakers"). These types of leaks cannot and should not be repaired in the field. NEVER repair equipment under pressure. This should only be handled with the assistance of the supplier.
- **Pressure Relief Device –** can occur at 2 points – 1. Around its threads or 2. Through its relief channel. These types of leaks cannot and should not be repaired in the field. NEVER repair equipment under pressure and NEVER tamper with pressure relief devices. Contact your supplier for immediate assistance.
- **Valve Stem –** can occur along the valve stem through the packing or diaphragms. Leaks of this nature can be stopped by closing the valve and venting any pressure from the outlet. This should be reported to the supplier so they can advise if that particular valve design will allow a packing adjustment to correct the problem or if arrangements must be made to return cylinder to supplier.
- **Valve Outlet –** Can occur due to leak-through at the seat. Many times this can be corrected or prevented by using proper valve operational techniques. When proper closing procedures fail to completely stop leakage, a pressure tight outlet seal can be installed to stop the leak. Always contact the supplier for assistance.

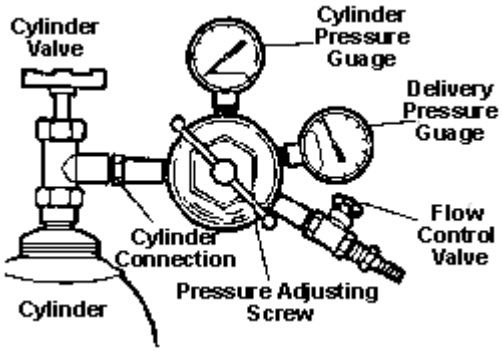

Supervisor Responsibility

- Supervisors are responsible to facilitate and/or provide proper instruction on PPE and training
- Enforcement
- Compliance

Employee Responsibility

- Ensure you are trained in the use and handling of compressed gas cylinders
- Take special precautions when working with and around this kind of equipment
- Store different gases separately and isolated from other flammables such as gasoline

*** Regulatory Reference**
NB OHSA & Reg 91-191, (July 1, 2011) Part VIII, Section 74 to 79
NS OHSA & Reg S.N.S 1996, c.7, (Jun 12, 2013) Part 5, Section 45 to 49
PE OHSA General Regs EC180/87; (Jan, 2013) 43/06, Part 37
NL OHSA & Reg 5/12, (Jan, 2012) Part XXI, Section 450

The information contained in this publication is intended for general use and may not apply to every circumstance. It is not a definitive guide to government legislation and does not relieve persons using this publication from their responsibilities under the Workplace Safety and Health Act or applicable legislation.
The appropriate regulations and statutes should always be consulted and adhered to. Atlantic Roofers Limited/North Shore Roofing Ltd. and its affiliates do not guarantee the accuracy of, nor assume liability for the information presented here.

General

Cylinder leaks usually occur at welded seams (on low pressure cylinders) or at the cylinder valve. Proper quality control of materials and inspections lessen the probability of cylinder leaks.

Hazards Present

• Fire	• Explosion	• Corrosion

Protective Mechanisms

• Eye/Hand Protection	• ERP (Emergency Response Plan)	• Manufacturers Recommendations
• Respirator	• WHMIS Training	• Safe Work Practice

Do

- DO leave key wrenches on cylinders in use so the cylinders can be closed quickly
- DO ensure that connections between the regulators and cylinder valves are tight
- DO check the accuracy of regulator pressure gauges at least yearly
- DO bond and ground all cylinder lines and equipment used with flammable gases
- DO use wrench of proper size for attaching regulator to cylinder.
- DO work in a well ventilated area

Do Not

- DO NOT use pipe wrench or pliers for attaching regulator to cylinder.
- DO NOT use a regulator intended for use with another gas
- DO NOT use oil or grease to lubricate tight threads. Can cause explosion.
- DO NOT use cylinders without a regulator.
- DO NOT use compressed gas to blow away dust or dirt
- DO NOT extinguish a combustible gas flame until the source of gas has been shut off. The gas can re-ignite and explode.

Regulator Use

- Make sure the regulator threads match the cylinder valve outlet threads. Clean cylinder valve before coupling with regulator. Connect the regulator to the cylinder's outlet valve.
- Fit flashback arrestors or check valves between cylinders and equipment when using a flammable gas or when doing a procedure at cylinder pressure.
- Use regulators designed for the contents of the cylinders. Regulators are not to be used to stop the flow of gas from the cylinder. Close the main cylinder valve when the gas is not being used. Regulators can leak and allow excessive pressures to develop in equipment.

ON

1. Check that flow control valve is closed
2. Turn the pressure adjusting screw counter clockwise until it turns freely
3. Slowly open the cylinder valve fully
4. Check the cylinder pressure gauge for expected value. A difference indicates that valve, safety device, or plugs are leaking
5. Turn the pressure adjusting screw clockwise until the required pressure is reached
6. Control the gas flow by the flow control valve

OFF

1. Shut cylinder valve first
2. Allow residual gases in valves to drain
3. Shut pressure adjusting screw when gauges fall to zero
4. Close the flow control valve

DO NOT ADJUST pressure by using the regulator to control flow rates. This defeats the purpose of the pressure regulator. When higher flows are obtained by this way, the pressure may be above the design of the system.

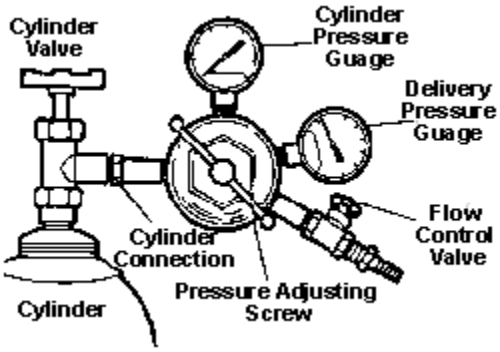

Set-up Considerations

- Use a gas detector to warn of leaks when handling toxic gas cylinders
- When using corrosive gases, work the cylinder valve frequently to prevent freezing. Flush regulators and valves with dry air or nitrogen after each use in corrosive service. Do not leave control devices on these cylinders, except in frequent use. Before discharging corrosive gases into a liquid trap, always use a check valve or a vacuum break device to prevent a dangerous suck-back.
- Remove regulators from empty cylinders. Replace the protective caps. Mark the cylinder "MT". Never empty a cylinder completely. Leave a slight pressure to keep contaminants out.

Supervisor Responsibility

- Supervisors are responsible to facilitate and/or provide proper instruction on PPE and training
- Enforcement
- Compliance

Employee Responsibility

- Ensure you are trained in the use and handling of compressed gas cylinders
- Take special precautions when working with and around this kind of equipment
- Store different gases separately and isolated from other flammables such as gasoline

*** Regulatory Reference**
NB OHSA & Reg 91-191, (Jul 1, 2011) Part VIII, Section 74 to 79
NS OHSA & Reg S.N.S 1996, c.7, (Jun 12, 2013) Part 5, Section 45 to 49
PE OHSA General Regs EC180/87; 43/06, (Jan, 2013) Part 37
NL OHSA & Reg 5/12, (Jan, 2012) Part XXI, Section 450

The information contained in this publication is intended for general use and may not apply to every circumstance. It is not a definitive guide to government legislation and does not relieve persons using this publication from their responsibilities under the Workplace Safety and Health Act or applicable legislation.
The appropriate regulations and statutes should always be consulted and adhered to. Atlantic Roofers Limited/North Shore Roofing Ltd. and its affiliates do not guarantee the accuracy of, nor assume liability for the information presented here.

General

Protecting employees and general public from injuries associated with the use of cleaning solvents. Cleaning solvents are used in construction work to clean tools, equipment and within shop, for general cleaning.

Hazards Present

- Respiratory damage/death
- Contact with skin
- Property Damage
- Flammable
- Explosive
-

Protective Mechanisms

- WHMIS
- Safe Work Practice/Procedure
- Manufacturers recommendations
- MSDS in place and currant
- PPE
- ERP (Emergency Response Plan)

Do

- DO ensure you consult with the appropriate MSDS information sheet prior to use
- DO clean up spills quickly and properly using appropriate spill kits and PPE
- DO have appropriate emergency procedures in place
- DO use personal protective equipment
- DO keep product containers tightly sealed when not in use
- DO substitute for a less hazardous method when possible

Do Not

- DO NOT allow unprotected workers in the area where solvents are being used
- DO NOT horseplay or joke around when using solvents
- DO NOT leave oil soaked rags lying around. They could heat up and spontaneously combust
- DO NOT dispense flammable and combustible liquids near an ignition source
- DO NOT pour waste flammable liquids down sinks or drains
- DO NOT use safety containers that are damaged in any way

Supervisor Responsibility

- Supervisors are responsible to facilitate/or provide proper instruction on PPE and training
- Must be aware of all solvents that are used on the job

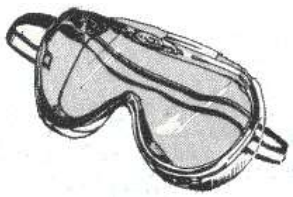

Employee Responsibility

- Ensure all WHMIS requirements are met
- Check toxic hazards of all solvents before use (MSDS)
- When breathing hazards exist, use the appropriate respiratory protection
- Use non-flammables and solvents in special storage areas
- Ensure that proper containers are used for transportation, storage and field use of solvents/flammables
- Do not use solvents in areas where food may be contaminated
- Use approved containers for disposal of rags and other work
- Know how to handle emergencies. Review the ERP (emergency response plan) prior to using solvents

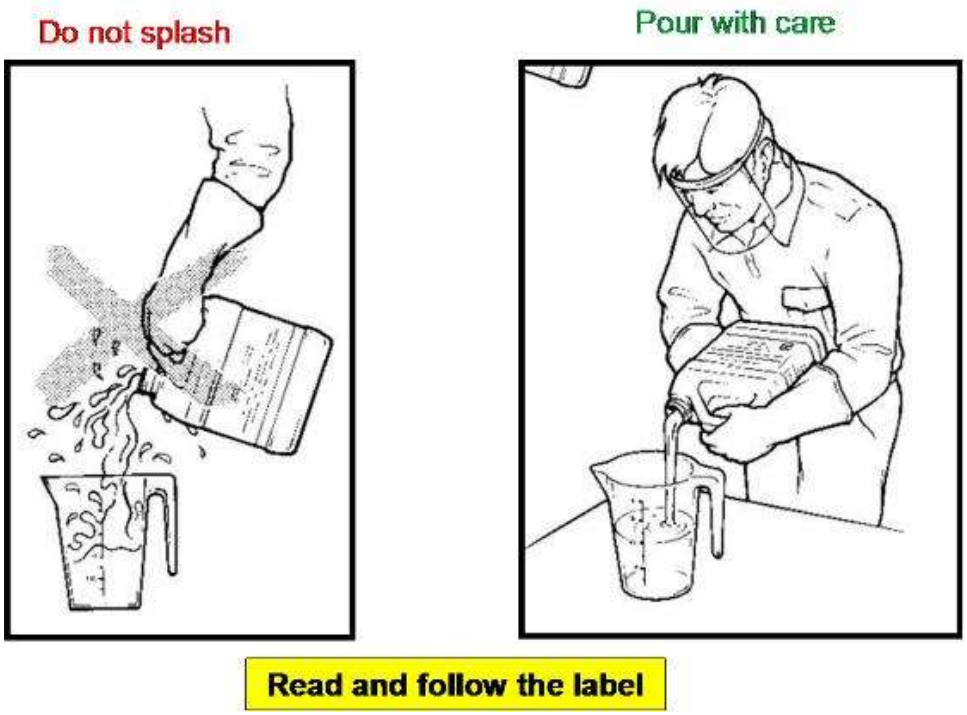

*** Regulatory Reference**
NB OHSA & Reg 91-191 (Jul 1, 2011) Part VIII, Part 5 to 79
NS OHSA & Reg S.N.S 1996, c.7, (Jun 12, 2013) Part 4, Section 20 to 23, Part 5, Section 36 to 44
PE OHSA General Regs EC180/87; 43/06, (Jan, 2013) Part 4, Section 4.1, Part 5, Section 5.1(J),(k),(l)
NL OHSA & Reg 5/12, (Jan 2012) Part III, Section 38, Part VI, Section 42 & 59, Part XIII, Section 283, Part XVII, Section 398

The information contained in this publication is intended for general use and may not apply to every circumstance. It is not a definitive guide to government legislation and does not relieve persons using this publication from their responsibilities under the Workplace Safety and Health Act or applicable legislation.
The appropriate regulations and statutes should always be consulted and adhered to. Atlantic Roofers Limited/North Shore Roofing Ltd. and its affiliates do not guarantee the accuracy of, nor assume liability for the information presented here.

Driving - Cell Phone Usage

General

Protecting employees and general public from injuries associated with the IMPROPER use of Cell Phones while operating a motor vehicle.

Hazards Present

- Collision
- Fatal Injuries
- Property Damage

Protective Mechanisms

- Highway Traffic Act
- Local, Regional & Federal Regulations
- Safe Work Practice
- Training
- Manufacturers recommendations

Do

- DO get to know your cell phone and its features such as voice dialing
- DO use a hands free device
- DO use your cell phone to call for help
- DO call roadside assistance when necessary

Do Not

- DO NOT continue conversations during hazardous driving conditions
- DO NOT take notes or look up phone numbers while driving
- DO NOT text while driving
- DO NOT manually dial numbers while driving
- DO NOT engage in stressful or emotional conversations that may be distracting

Supervisor Responsibility

- Advise employees on relevant safe work practices and procedures on driving
- Enforcement
- Compliance

Employee Responsibility

- Make driving your first priority – pull over to safe area to take/make calls
- Whenever possible, let your "Voice Mail" take your incoming calls
- Do not engage in stressful or emotional conversations while driving
- Utilize a hands-free device whenever possible
- Ensure you know your wireless phone and its features such as speed dial and redial
- Avoid taking notes or look up phone numbers while driving – pull over to safe area to take/make notes
- Ensure cellular devices remain in the vehicle while refueling

*** Regulatory Reference**
NB Motor Vehicle Act (Jun 2011) – Bill 24
NS Motor Vehicle Act (Apr 2008) – Sections 100D(1) and 184(7)
PE Highway Traffic Act, (Jan 2010) Section 291.1 and 133
NL Highway Traffic Act, (Apr 2003) Part V, Section 176.1 & 34

The information contained in this publication is intended for general use and may not apply to every circumstance. It is not a definitive guide to government legislation and does not relieve persons using this publication from their responsibilities under the Workplace Safety and Health Act or applicable legislation.
The appropriate regulations and statutes should always be consulted and adhered to. Atlantic Roofers Limited/North Shore Roofing Ltd. and its affiliates do not guarantee the accuracy of, nor assume liability for the information presented here.

Driving – Company Vehicles

General

Protecting employees, co-workers and general public from injuries associated with the use of company vehicles. All employees who operate vehicles must hold a valid driver's license applicable to the type of vehicle being operated as a condition of employment.

Hazards Present

- Collision
- Fatal Injuries
- Property Damage

Protective Mechanisms

- Highway Traffic Act
- Local, Regional & Federal Regulations
- Safe Work Practice
- Company Rules
- Manufacturers recommendations

Do

- DO provide the office with a copy of a valid driver's license
- DO require a drive's abstract prior to starting
- DO ensure all drivers are 21 years of age or older
- DO back in when practical
- DO make sure the vehicle has an emergency roadside kit
- DO drive defensively
- DO perform daily inspections and document any defects. Every person who carries out an inspection shall record on a trip inspection report any safety defects as disclosed on the inspection. If no safety defects are disclosed on the inspection, the person who carries out the inspection shall state this on the trip inspection report
- DO ensure all loads are adequately secured when towing
- DO ensure to inspect any towed behind equipment

Do Not

- DO NOT use drugs or alcohol
- DO NOT drive when fatigues
- DO NOT offer rides to strangers or hitchhikers
- DO NOT drive under the influence of alcohol or drugs and make sure that your ability or alertness is not impaired
- DO NOT exceed 12 hours driving within a 24-hour period
- DO NOT wear headset while driving
- DO NOT operate a cell phone while driving

Supervisor Responsibility

- Supervisors are responsible to facilitate or provide proper instruction to their workers on protection requirements and training
- Compliance and enforcement
- Supervisors to access the driving ability of all new employees prior to being granted driving approval

Employee Responsibility

- Operation of a motor vehicle must be performed according to all vehicle codes, traffic laws, company procedures and manufacturers recommended operating guidelines
- Performa "walk around" inspection prior to traveling. Must be documented on appropriate inspection log
- Be familiar with the vehicle and its capabilities
- Ensure seat belts are worn at all times when travelling
- Use good judgement and understand the basic recovery skills appropriate to the vehicle you are driving
- Refer to SWP #8 – Driving – Cell Phone Usage
- Refer to SWP #10 – Driving – Winter Conditions

Note: Atlantic Group of Companies does not own/operate commercial vehicles. Company owned vehicles are used for job site company usage only

*** Regulatory Reference**

NB Motor Vehicle Act (Jun 2011)
PE Highway Traffic Act, (Jan 2010)
NS Motor Vehicle Act (Apr 2008)
NL Highway Traffic Act, (Apr 2003)

The information contained in this publication is intended for general use and may not apply to every circumstance. It is not a definitive guide to government legislation and does not relieve persons using this publication from their responsibilities under the Workplace Safety and Health Act or applicable legislation.
The appropriate regulations and statutes should always be consulted and adhered to. Atlantic Roofers Limited/North Shore Roofing Ltd. and its affiliates do not guarantee the accuracy of, nor assume liability for the information presented here.

Driving – Winter Conditions

SWP #10

General

Protecting workers from injuries associated with winter driving. Operation of motor vehicles must be performed according to all vehicle codes, traffic laws, company procedures, and manufacturer's recommended guidelines..

Hazards Present

- Collision
- Fatal Injuries
- Property Damage

Protective Mechanisms

- Regional & Federal Regulations
- Highway Traffic Act
- Safe Work Practice/Procedure
- Company Rules
- Manufacturers recommendations

Do

- DO ensure you have a valid operator's license
- DO be conversant with traffic laws and regulations
- DO drive defensively
- DO back in when practical
- DO make sure to clear snow from all windows, lights and mirrors
- DO accelerate and brake gently to reduce skids and spinouts
- DO ensure fuel tank is full when possible
- DO monitor weather reports
- DO make sure the vehicle has an emergency road kit
- DO perform daily inspections and document any defects. Every person who carries out an inspection shall record on a trip inspection report any safety defects and disclosed in the inspection. If no safety defects are disclosed by the inspection, the person who carries out the inspection shall state this on the

Do Not

- DO NOT use drugs or alcohol
- DO NOT drive when fatigued
- DO NOT offer rides to strangers or hitchhikers
- DO NOT use cruise control on icy or wet roads
- DO NOT wear winter clothing that restricts movement, vision or hearing

Supervisor Responsibility

- Supervisors are responsible to facilitate/or provide proper instruction to their workers on protection requirements and training
- Compliance & Enforcement

Employee Responsibility

- Perform a "walk around" inspection prior to travelling
- Be familiar with vehicle and it's capabilities
- Ensure seat belts are worn at all times when travelling
- Use good judgement and understand the basic recovery skills appropriate to the vehicle you are driving
- **Refer to SWP #8 – Cell Phone Usage**
- **Refer to SWP #9 – Driving –Company Vehicles**

*** Regulatory Reference**
NB Motor Vehicle Act (Jun 2011)
NS Motor Vehicle Act (Apr 2008)
PE Highway Traffic Act, (Jan 2010)
NL Highway Traffic Act, (Apr 2003)

The information contained in this publication is intended for general use and may not apply to every circumstance. It is not a definitive guide to government legislation and does not relieve persons using this publication from their responsibilities under the Workplace Safety and Health Act or applicable legislation. The appropriate regulations and statutes should always be consulted and adhered to. Atlantic Roofers Limited/North Shore Roofing Ltd. and its affiliates do not guarantee the accuracy of, nor assume liability for the information presented here.

General

All staff must ensure there are safe work practices/procedures in place to control any potentially harmful dust emanating from any work activity such as work involving rock, gravel, soil timber products, abrasives and asbestos.

Hazards Present

- Respiratory Illness
- Eye Irritation
- Skin Irritation/Infection

Protective Mechanisms

- Eye Protection
- Respiratory Protection
- Manufacturers Recommendations
- Hand Protection
- Disposable clothing
- WHMIS

Do

- DO work in a well-ventilated area and, where possible, in the open air (but not on windy days)
- DO thoroughly wet down the material before you start and regularly during the work by lightly spraying surfaces with water
- DO use non powered hand tools if possible (e.g. a guillotine, hand saw or hand powered drill) as these generates smaller amounts of dust and waste chips that are coarser than those generated when using power tools
- DO isolate the work areas from other persons (i.e the public)

Do Not

- DO NOT use high pressure water jets to wet surfaces as this may increase the spread of loose fibers or dust

Supervisor Responsibility

- Supervisors are responsible to facilitate/or provide proper instruction to their workers on protection requirements and training
- Compliance & Enforcement

Employee Responsibility

- Ensure proper ventilation
- If in doubt about choosing the correct respiratory protection or if you are not sure of the source of the dust, stop work and advise your supervisor

*** Regulatory Reference**
NB OHSA & Reg 91-191, (July 1, 2011) Part III, Section 25.2, Part XV, Section 227
NS OHSA & Reg S.N.S 1996, c.7, (June 12, 2013) Part 4, Section 15, Part 7, Section 68
PE OHSA General Regs EC180/87; 43/06, (Jan, 2013) Part 29, Section 29.7, Part 33, Section 33.15, Part 49, Section 49.1
NL OHSA & Reg 5/12, (Jan 2012) Part VI, Section 45, 46, 47, Part VIII, Section 123, Part XVI, Section 375

The information contained in this publication is intended for general use and may not apply to every circumstance. It is not a definitive guide to government legislation and does not relieve persons using this publication from their responsibilities under the Workplace Safety and Health Act or applicable legislation.
The appropriate regulations and statutes should always be consulted and adhered to. Atlantic Roofers Limited/North Shore Roofing Ltd. and its affiliates do not guarantee the accuracy of, nor assume liability for the information presented here.

General

With electricity, we are dealing with something that cannot be seen and is still the most useful power controlled by man. It is useful but can be a very destructive power to both man and material if the proper precautions are not taken. The danger is always there and we must know what means of protection can be used to eliminate the hazards. All electrical work must be carried out according to the applicable Legislation.

Hazards Present

- Electrocution
- Electrical Shock
- Electrical Burn
- Fall from Height

Protective Mechanisms

- Following Safe Work Practices/Procedures
- Regional & Federal Regulations
- Company Rules
- PPE
- Manufacturer's Instructions and Warning Labels

Do

- DO locate computers, small appliances, etc next to power sources wherever possible
- DO use power bars that are CSA-certified and have overload protection
- DO ensure that only qualified workers (i.e. electricians) are authorized to work on electrical conductors and equipment
- DO keep power cords away from heat, water and oil which can damage the insulation and cause an electrical shock
- DO disconnect the power supply to a power tool before making any adjustments
- DO ensure that tools are properly grounded (i.e. 3-wire cord with 3-prong plug that is plugged into a grounded 3-pole outlet) or double insulated
- DO inspect all power tools, power cords and electrical fittings for damage or wear prior to use. Repair or replace damaged equipment immediately
- DO only use cords or equipment that is rated for the level of amperage or wattage that you are using
- DO always use a ladder made of non-conductive material (e.g. fiberglass) when working with or near electricity or power lines
- DO be aware that unusually warm or hot cords or outlets may be a sign that unsafe conditions exist. Unplug any cords and do not use outlets until an electrician has checked them
- DO keep power cords clear of tools during use
- DO ensure tools are switched OFF before connecting them to a power supply

Do Not

- DO NOT use an extension cord as a permanent power supply
- DO NOT use any broken or unsafe electrical equipment
- DO NOT repeatedly reset the same electrical break or replace the same electrical fuse. Notify the maintenance supervisor of the problem
- DO NOT carry power tools by their electrical cord
- DO NOT clean power tools with flammable or toxic solvents
- DO NOT use electrical outlets or power cords that have exposed wiring
- DO NOT block access to circuit breakers or fuse boxes
- DO NOT tie power cords in knots. Knots can cause short circuits
- DO NOT store flammable materials near electrical equipment/panels
- DO NOT use nails or staples to secure an electrical cord to a wall or floor
- DO NOT allow vehicles, carts, trolleys to pass over unprotected power cords
- DO NOT plug several cords into an outlet
- DO NOT bypass the switch on a power tool and operate it by connecting and disconnecting the power cord
- DO NOT touch a person or electrical apparatus in the event of an electrical accident. Always disconnect the current first

Supervisor Responsibility

- Supervisors are responsible to facilitate/or provide proper instruction to their workers on protection requirements and training
- Ensure that all electrical equipment meets Provincial Regulations and must meet be CSA approved
- Compliance & Enforcement

Employee Responsibility

- Do not use any unsafe or broken electrical equipment. Attach a warning tag, take it out-of-service and advise your supervisor
- Use a metal conduit or planks alongside power cords to protect them from being driven over with vehicles, carts, trolleys
- Do not use electrical tools in wet conditions
- Only use extension cords to **temporarily** supply power to an area that does not have a power outlet.

Table "A"

**** All equipment must maintain the proper distances from power lines.**

Minimum Distance	
Voltage	**Distance**
750 volts, up to 69,000 volts	3 Meters (10 ft.)
69,000 volts up to 138,000 volts	5 Meters
138,000 volts and over	6 Meters (20 ft.)

Know the hazards of electricity. It will help prevent injuries or even death!

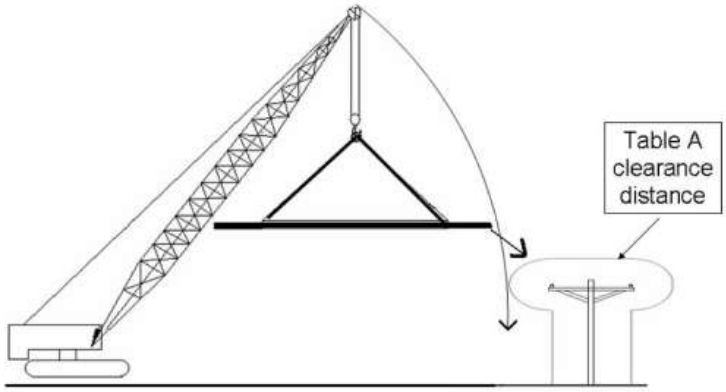

*** Regulatory Reference**
NB OHSA & Reg 91-191, (July 1, 2011) Part VIII, Section 57, 70, Part IX, Section 83, 84, Part XI, Section 126, Part XV, Section 211
NS OHSA & Reg S.N.S 1996, c.7, (June 12, 2013) Part 11
PE OHSA General Regs EC180/87; 43/06, (Jan, 2013) Part 23, Section 23.1, Part 29, Section 29.6, Part 34, Section 34.2, Part 36
NL OHSA & Reg 5/12, (Jan 2012) Part II, Section 11, Part VI, Section 69,Part VII, Section 73, 80, 82, Part IX, Section 136, Part XI, Section 162,

The information contained in this publication is intended for general use and may not apply to every circumstance. It is not a definitive guide to government legislation and does not relieve persons using this publication from their responsibilities under the Workplace Safety and Health Act or applicable legislation.
The appropriate regulations and statutes should always be consulted and adhered to. Atlantic Roofers Limited/North Shore Roofing Ltd. and its affiliates do not guarantee the accuracy of, nor assume liability for the information presented here.

Extension Cords

SWP #13

General

This applies to the use of cord and plug connected equipment, including flexible cord sets (extension cords).

Hazards Present

- Shock / Injury
- Fire
- Property Damage
- Tripping Injuries
- Insufficient Voltage

Protective Mechanisms

- Grounding Type Equipment
- Safe Work Practice/Procedure
- Manufacturers Recommendations
- Training
- PPE
- Visual Inspections

Do

- DO use an extension cord only as a temporary connection
- DO always protect cords by using metal conduit or planks alongside power cords
- DO use a heavy-duty, grounded, three-pronged cord when working with power tools
- DO always check cords for frays, cracked insulation and damaged plugs
- DO only use extension cords of continuous length

Do Not

- DO NOT use lamp-type extension cords (No 18 wire) for any device drawing more than 7 amps. Use a heavy duty cord with No. 16 or No. 14 wire instead
- DO NOT run extension cords across foot traffic areas or near water
- DO NOT used spliced cords
- DO NOT repair extension cords unless performed by qualified personnel

Supervisor Responsibility

- Supervisors are responsible to facilitate/or provide proper instruction on PPE and training
- Remove from service if defective or damaged
- Compliance

Employee Responsibility

- Use approved cords where employees are likely to contact water
- Visually inspect before use on any shift
- Do not alter attachment plugs and receptacles
- Inspect the relationship of the plug and receptacle contacts to ensure that they are of proper mating configurations
- Do not use adapters which may interrupt the continuity of the equipment grounding connection
- Make sure your hands are dry when plugging and unplugging cords and equipment

*** Regulatory Reference**
NB OHSA & Reg 91-191, (July 1, 2011) Part IX, Section 83(b)(1), 84(1), 84(2)
NS OHSA & Reg S.N.S 1996, c.7, (June 12, 2013) Part 1, Section 2(k), Part 9, Section 106(b)
PE OHSA General Regs EC180/87; 43/06, (Jan, 2013) Part 29, Section 29.6, Part 36, Section 36.28
NL OHSA & Reg 5/12, (Jan 2012) Part IX, Section 136(b),

The information contained in this publication is intended for general use and may not apply to every circumstance. It is not a definitive guide to government legislation and does not relieve persons using this publication from their responsibilities under the Workplace Safety and Health Act or applicable legislation.
The appropriate regulations and statutes should always be consulted and adhered to. Atlantic Roofers Limited/North Shore Roofing Ltd. and its affiliates do not guarantee the accuracy of, nor assume liability for the information presented here.

Fall Protection

SWP #14

General

- Protect workers from injuries associated by not utilizing proper fall protection. Fall protection shall be utilised where there is or may be a danger to workers falling. NO person shall use fall protection devices until they have received adequate training.

Hazards Present

• Shock / Injury	• Fire	• Property Damage
• Tripping Injuries	• Insufficient Voltage	

Protective Mechanisms

• Fall Protection Plan	• Safe Work Practice/Procedure	• Manufacturers Recommendations
• Training	• PPE / Barricades / Warnings	• ERP (Emergency Response Plan)

Do

- DO read and understand the manufacturer's instructions for all equipment to be used
- DO ensure that only properly trained and familiarized personnel are authorized to operate equipment
- DO choose the correct equipment to reach the work
- DO inspect equipment before use
- DO ensure that only qualified personnel inspect and maintain PPE equipment
- DO immediately remove from service personal fall protection systems or components subjected to impact loading (e.g., involved in a fall)
- DO use PPE equipment only for its intended use
- DO ensure that the equipment guardrail system is properly installed and positioned, and access gate(s) and opening(s) closed per the manufacturer's recommendations
- DO operate the equipment safely to avoid the risk of ejection (e.g., drop-offs, being hit by other vehicles or objects)
- DO assess each job site for potential fall hazards
- DO ensure that each operator/occupant is wearing the correct size harness

Do Not

- DO NOT allow equipment contact with sharp edges. Ensure that all edges that PPE equipment may come in contact with are smooth, rounded or chamfered
- DO NOT remove the guardrail or leave the gate open during use
- DO NOT sit or climb on the edge of the basket or use planks, ladders or other devices for a work position
- DO NOT connect to adjacent poles, structures or equipment while working from equipment
- DO NOT use defective equipment or components
- DO NOT attach two lanyards together to make them longer

Supervisor Responsibility

- To facilitate and/or provide proper instruction to their workers on protection requirements and training
- Hazard analysis
- Work site inspection
- Plan to "eliminate" or "prevent" the fall
- Determine type of equipment required

Supervisor Responsibility (con't)

- Monitor performance and supervise the work to ensure the use, application and operation of the equipment is in conformance with all applicable standards, regulations and safety rules
- Direct and monitor the workers equipment to ensure that each person wears PPE equipment when required.

Employee Responsibility

- Be fully conversant with Fall Protection systems
- Ensure you know capabilities of fall protection equipment
- Ensure barricades, ribbons and signs identify restricted areas
- Ensure you understand the procedures for rescue of workers who may be unable to rescue themselves from an elevated work area
- Ensure you know your anchor points
- Ensure you do not wrap the lanyards and/or rope around beams, girders, pipes, etc.
- Utilise buddy system and continually check each other's harness and D ring to ensure that the harness is not too lose or the D ring has not slipped down the back
- Fall protection is required where workers are exposed to a potential fall of 3m (9.9 ft) or more.
- Equipment must be inspected before each use and defective equipment must be removed from service.

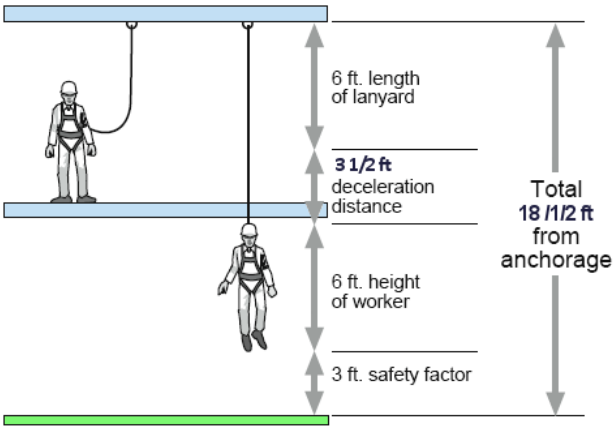

How to determine total fall distance with a shock-absorbing lanyard.

*** Regulatory Reference**

NB OHSA & Reg 91-191, (July 1, 2011) Part VII, Section 49, 49.1 to 49.8, 50, 50.1 to 50.5 REGULATION 2010-159 under the OCCUPATIONAL HEALTH AND SAFETY ACT (O.C. 2010-495) (Aug 31, 2010)

NS OHSA & Reg S.N.S 1996, c.7, (June 12, 2013) Part 1, Section 2(n), Part 3, Section 9, 9A, Workplace Health and Safety Regulations made under Section 82 of the *Occupational Health and Safety Act* S.N.S. 1996, c. 7 O.I.C. 2013-65 (June 12, 2013), N.S. Reg. 52/2013

PE OHSA General Regs EC180/87; 43/06, (Jan, 2013) Part 23, Section 23.7, CHAPTER O-1.01 OCCUPATIONAL HEALTH AND SAFETY ACT FALL PROTECTION REGULATIONS (June 9, 2012)

NL OHSA & Reg 5/12, (Jan 2012) Part V, Section 28, 29, 30, Part X, Section 138 to 146, Part XI, Section 197, 207, 217, 242, 247

The information contained in this publication is intended for general use and may not apply to every circumstance. It is not a definitive guide to government legislation and does not relieve persons using this publication from their responsibilities under the Workplace Safety and Health Act or applicable legislation.
The appropriate regulations and statutes should always be consulted and adhered to. Atlantic Roofers Limited/North Shore Roofing Ltd. and its affiliates do not guarantee the accuracy of, nor assume liability for the information presented here.

General

Protecting workers from injuries associated with IMPROPER use of fire extinguishers. Portable fire extinguishers must be installed, inspected and maintained on a regular basis to ensure proper operation in an emergency. Fires can start anywhere and at any time which is why it is important to know which fire extinguisher to use and how to use it.

Hazards Present

- Smoke Inhalation
- Burns
- Blocked Exit

Protective Mechanisms

- Training
- PPE
- Safe Work Practice/Procedure
- ERP (Emergency Response Plan)
- Manufacturers Recommendations

Do

- DO read the instruction manual to understand the use of the device
- DO check the rating or classification of the device to know the kinds of fire it is applicable
- DO follow the pneumonic PASS in extinguishing the flames
- DO maintain a safe distance when extinguishing the flames
- DO put signs and indicators on the location of the device. Make sure they can be seen easily
- Do hang extinguisher on the walls or use protective cabinets to keep them
- DO undergo proper training
- DO recharge the equipment after use and follow maintenance schedule

Do Not

- DO NOT use if you have no idea how to operate
- DO NOT use water agents on grease and oil fires or use dry chemical extinguishers to electrical devices because it is corrosive
- DO NOT aim at the flames of the fire
- DO NOT stand too close to the fire or even plan to walk on those extinguished areas
- DO NOT put extinguishers in areas where fire is most likely to happen making them unreachable
- DO NOT leave extinguishers near anything that is highly magnetic
- DO NOT play with the device or play with its substance as it could cause injury

Supervisor Responsibility

- Supervisors are responsible to facilitate and/or provide proper instruction to their workers on protection requirements and training
- Proper selection of equipment
- Conversant with proper regulations

Employee Responsibility

- Ensure you are fully trained with operation and maintenance of fire extinguishers
- Check cylinder
- Inspect cartridge puncture cap
- Weigh cartridge
- With cartridge removed, check action of puncture lever
- Check hose and nozzle for obstruction
- Check date of manufacture
- Check level and condition of powder

Employee Responsibility (con't)

- Check fill-cap threads and gasket
- Attach visual seal
- Check pressure gauge

KNOW YOUR FIRE EXTINGUISHERS

TYPE OF EXTINGUISHER		TYPE OF FIRE: A ORDINARY COMBUSTIBLES - wood - paper - cloth, etc.	B FLAMMABLE LIQUIDS - gasoline - paints (oil based) - oils, etc.	C ELECTRICAL EQUIPMENT - motors - switches	RANGE	HOW TO OPERATE
WATER	STORED PRESSURE TYPE		NO	NO	9m to 12m	Place foot on footrest, pump handle and direct stream at base of flame.
WATER	STORED PRESSURE		NO	NO	9m to 12m	Pull pin, rupture cartridge if applicable, squeeze nozzle to release agent. Direct discharge at base of flames in a sweeping motion, then direct it gradually forward or at remaining material that is burning.
CO_2		NO			1m to 1.5m	
HALON					2.5m to 4.5m	
DRY CHEMICAL	ORDINARY	NO			1.5m to 6m	
DRY CHEMICAL	MULTI-PURPOSE				5m to 7.5m	NOTE: All extinguishers require annual servicing or servicing after use.

*** Regulatory Reference**

NB OHSA & Reg 91-191, (July 1, 2011) Part VIII, Section 57(1), Part XVIII, Section 275(1), 275(3). Fire Prevention Act (June 10, 2011)
NS OHSA & Reg S.N.S 1996, c.7, (June 12, 2013) Part 4, Section 25, Fire Safety Act (Apr 1, 2013)
PE OHSA General Regs EC180/87; 43/06, (Jan, 2013) Part 7, Section 7.4, Part 25. Fire Prevention Act (May 30, 2012)
NL OHSA & Reg 5/12, (Jan 2012) Part V, Section 41, Part XII, Section 251, Part XIV, Section 308, Part XX, Section 443, 448. NL Fire Protection Services Act (May 8, 2012)

The information contained in this publication is intended for general use and may not apply to every circumstance. It is not a definitive guide to government legislation and does not relieve persons using this publication from their responsibilities under the Workplace Safety and Health Act or applicable legislation.
The appropriate regulations and statutes should always be consulted and adhered to. Atlantic Roofers Limited/North Shore Roofing Ltd. and its affiliates do not guarantee the accuracy of, nor assume liability for the information presented here.

Flammable Liquids – Filling Portable Containers

SWP #16

General

Static electrical charges are a dangerous source of ignition; capable of igniting a flammable mixture of petroleum vapours and air. This informs workers about the dangers of portable fuel containers such as jerry cans igniting when being filled or used. Remember STOP, DROP AND ROLL.

Hazards Present

- Flash Fire / Explosion
- Eye / Skin Irritation
- Inhalation

Protective Mechanisms

- Eye Protection
- Respiratory Protection
- Manufacturers Specifications
- Hand Protection
- WHMIS
- Training

Do

- DO ensure that portable fuel containers are being placed on the ground while they are being filled from fuel dispensers (contact with the earth allows any build-up of static electrical charges to dissipate and if accidental overflow occurs during the filling the risk of a fire is reduced)
- DO keep the nozzle of the petrol dispenser in contact with the container at all times during the filling operation (this will maintain the electrical continuity and prevent a spark jumping across the gap between the nozzle and the container)
- DO wear clothing to reduce static electricity and wear shoes with conductive soles
- DO keep one hand on the container while filling to reduce the likelihood of static electricity build up and discharge
- DO transport portable fuel containers secured, upright and away from heat sources, such as the sun, in a well-ventilated space

Do Not

- DO NOT use a plastic funnel to fill a portable fuel container. The funnel will act as an insulator and promote the generation of static electrical charges
- DO NOT get back into your vehicle after fuelling has started. If you do, new static buildup can cause a flash fire. (Make sure you touch metal prior to starting any fuelling procedures)
- DO NOT mix even a small amount of gasoline with kerosene or diesel fuel
- DO NOT smoke where gasoline is handled or stored
- DO NOT leave your vehicle's engine running when filling

Supervisor Responsibility

- To facilitate and/or provide proper instruction to their workers on protection requirements and training
- Hazard analysis

Employee Responsibility

- Ensure you follow all safe work practices and procedures

*** Regulatory Reference**

Centers for Disease Control and Prevention – Fire hazard from Filling Portable Gas Cans in Pickup Trucks and Cars – Publication # 98-111 (July 1998)

The information contained in this publication is intended for general use and may not apply to every circumstance. It is not a definitive guide to government legislation and does not relieve persons using this publication from their responsibilities under the Workplace Safety and Health Act or applicable legislation.
The appropriate regulations and statutes should always be consulted and adhered to. Atlantic Roofers Limited/North Shore Roofing Ltd. and its affiliates do not guarantee the accuracy of, nor assume liability for the information presented here.

Flammable Liquids - Transportation

SWP #17

General

Protecting workers from injuries associated with transporting flammable liquids. Transportation and handling of flammable liquids is an integral part of daily construction activity involving workers and equipment

Hazards Present

- Flash Fire / Explosion
- Eye / Skin Irritation
- Inhalation

Protective Mechanisms

- TDG (Transportation of Dangerous Goods)
- Safe Work Practice/Procedure
- ERP (Emergency Response Plan)
- Spill Kit
- PPE
- Fire Extinguisher

Do

- DO that flammable liquid containers are certified and labeled by a recognized testing agency (UL/ULC)
- DO regularly inspect and maintain containers and dispensing units for visible damage and wear
- DO make sure flammable liquids are stored and used well away from any heat source or flame
- DO wear proper protective clothing (e.g. safety goggles, long sleeves & pants, protective shoes)

Do Not

- DO NOT store flammable liquids in your vehicle
- DO NOT smoke around flammable liquids
- DO NOT fill the container to the brim. Close the container tightly and transport with adequate ventilation (e.g. open truck box)
- DO NOT use water to extinguish a flammable liquid fire. Use a Type B Extinguisher.

Supervisor Responsibility

- Supervisors are responsible to facilitate and/or provide proper instruction to their workers on protection requirements and training

Employee Responsibility

- Ensure TDG trained
- Ensure shipping documentation in place
- Ensure labels and placards as per TDG regulations
- Flammable liquids must be transported and stored in approved containers bearing CSA, ULC and WHMIS labels
- Ensure flammable liquids are not carried in passenger compartment of a vehicle
- Ensure that the containers are not damaged and that caps or fittings are properly secured after filling
- Ensure contained in an upright position and are secured to prevent overturning
- Follow flammable liquid transportation safe job procedure step by step

*** Regulatory Reference**

Centers for Disease Control and Prevention – Fire hazard from Filling Portable Gas Cans in Pickup Trucks and Cars – Publication # 98-111 (July 1998)

The information contained in this publication is intended for general use and may not apply to every circumstance. It is not a definitive guide to government legislation and does not relieve persons using this publication from their responsibilities under the Workplace Safety and Health Act or applicable legislation.
The appropriate regulations and statutes should always be consulted and adhered to. Atlantic Roofers Limited/North Shore Roofing Ltd. and its affiliates do not guarantee the accuracy of, nor assume liability for the information presented here.

General

To prevent personnel from coming in contact with any revolving or moving equipment or parts of machines

Hazards Present

- Contact with Moving Parts
- Lack of Proper Ergonomics
- Contact with Energies (Electricity, Cold, Heat)
- Contact with Harmful Chemicals
- Contact with Pressurized Gas or Liquid

Protective Mechanisms

- PPE
- Training
- Safe Work Practice/Procedure
- Visual Inspections
- Manufacturers Recommendations
- Tag / Lock Out

Do

- DO ensure that all dangerous equipment and machines are not used or operated unless all hazards are properly guarded
- DO ensure all guards are in place before use
- DO keep hands away from moving parts
- DO inspect machinery before each use
- DO report any problems to your supervisor (e.g. broken or missing guards)
- DO follow all machine operating and maintenance instructions
- DO exercise good housekeeping
- DO use appropriate PPE

Do Not

- DO NOT operate, service, maintain or repair a machine unless trained and authorized to do so
- DO NOT wear loose clothing and tie long hair back that can become entangled with moving parts
- DO NOT distract an operator while operating a machine
- DO NOT leave machines running without supervision
- DO NOT use your hands to remove stuck materials
- DO NOT use machines with missing or disabled guards

Supervisor Responsibility

- Identify all parts of revolving or moving equipment or machines that create a contact hazard
- Guard all such parts with effective protective barriers
- Maintain such protective barriers in a functional condition

Employee Responsibility

- Inspect equipment and machines before use or operation to ensure that all guards are in place and functional
- Follow safe work practices and procedures
- Report any unsafe conditions to your supervisor

*** Regulatory Reference**

NB OHSA & Reg 91-191, (July 1, 2011) Part IX, Section 85, 87(c), Part XV, Section 216(h), Part XVI, Section 242(1), 244(b), 246
NS OHSA & Reg S.N.S 1996, c.7, (June 12, 2013) Part 7, Section 56(b), 58(e), Part 8, Section 87
PE OHSA General Regs EC180/87; 43/06, (Jan, 2013) Part 29, Section 29.7, 29.8, Part 30, Section 30.1, 30.2, 30.4, 30.9, 30.10, 30.13
NL OHSA & Reg 5/12, (Jan 2012) Part III, Section 17, Part V, Section 26, Part VI, Section 69(10)(6), Part VIII, Section 87,89,90,91,98

The information contained in this publication is intended for general use and may not apply to every circumstance. It is not a definitive guide to government legislation and does not relieve persons using this publication from their responsibilities under the Workplace Safety and Health Act or applicable legislation.
The appropriate regulations and statutes should always be consulted and adhered to. Atlantic Roofers Limited/North Shore Roofing Ltd. and its affiliates do not guarantee the accuracy of, nor assume liability for the information presented here.

General

To ensure suitable controls are applied, perform an assessment of the lift and determination of the lift method, equipment and number of people required which are critical to planning of the lift.

Hazards Present

• Personnel Injury	• Damage to Property	• Crane Tipping Over
•	•	

Protective Mechanisms

• Hazard Assessment/Equipment Inspections	• Safe Work Practice/Procedure	• ERP (Emergency Response Plan)
• Training / PPE	• Crane Hand Signals	• SWP Hoisting Hand Signals

Do	**Do Not**
• DO ensure personnel shall have an escape route in case of an unexpected movement of the load or equipment	• DO NOT have the operator to move a load directly over people
• DO ensure that the load to be lifted shall be confirmed as within the rated capacity of the lifting equipment and attached by means of suitable lifting accessories	• DO NOT have the operator of the lifting appliance shall not leave the operating controls while the load is suspended
• DO keep all people clear of overhead loads and areas of potential impact	• DO NOT have personnel undertake more than one task at a time, i.e. the signaller shall not handle loads and signal at the same time
• DO make sure that load slings or other approved single attachments are properly sized and seated in the hook saddle	• DO NOT allow your attention to be diverted • DO NOT use hoist to lift, support, or transport people
• DO make sure that the load is free to move and will clear all obstructions	• DO NOT apply the load to the tip of the hook
• DO inspect all equipment regularly, replace damaged or worn parts, and keep appropriate records of inspections and maintenance	• DO NOT lift more than the rated load • DO NOT use twisted, kinked, damaged or worn rope or chain or cable
• DO make sure the hook latches, if used, are closed and not supporting any part of the load	• DO NOT use manual load handling to stop a swinging load (only to be performed below shoulder height)
• DO make sure that the load is free to move and will clear all obstructions	• DO NOT use load rope or load chain as a sling or wrap load rope or load chain around the load
• DO warn personnel of an approaching load	• DO NOT lift a load if any binding prevents equal loading on all supporting ropes, chains, cable
• DO ensure you check load limits on all equipment, ensuring you have adequate load limit coverage	• DO NOT lift a load unless wire rope is properly seated in its groove(s) or unless chain is properly seated in chain wheel(s) or sprocket(s)
• DO ensure the designated signaler is highly visible to the crane operator and view is not obstructed at any time	

Supervisor Responsibility

- Supervisors are responsible to facilitate and/or provide proper instruction to their workers on protection requirements and training
- Designate one person in charge (PIC)
- Review hazards
- Hold a pre job meeting to ensure everybody understands their role
- All personnel shall understand their role and be competent to do it

Employee Responsibility

- Ensure you are trained in hoisting & rigging
- Personnel shall not undertake more than one task at a time, i.e. the signaller shall not handle loads and signal at the same time

- **Refer to SWP # 20 – Hoisting – Clips and Clamps**
- **Refer to SWP # 21 – Hoisting – Hand Signals**
- **Refer to SWP # 23 – Hoisting – Rigging**
- **Refer to SWP # 24 – Hoisting – Use of Shackles**

*** Regulatory Reference**
NB OHSA & Reg 91-191, (July 1, 2011) PartXV, Section 207 to 217, 231(2), 233, 234
NS OHSA & Reg S.N.S 1996, c.7, (June 12, 2013) Part 7, All
PE OHSA General Regs EC180/87; 43/06, (Jan, 2013) Part 34, Section All, Part 35, Section All, Part 46, Section All
NL OHSA & Reg 5/12, (Jan 2012) Part XI, Section 234, Part XIV, Section 287 to 345, Part XV, Section 346 to 372, Part XVI, Section 373 to 375, Part XXX, Section 614

The information contained in this publication is intended for general use and may not apply to every circumstance. It is not a definitive guide to government legislation and does not relieve persons using this publication from their responsibilities under the Workplace Safety and Health Act or applicable legislation.
The appropriate regulations and statutes should always be consulted and adhered to. Atlantic Roofers Limited/North Shore Roofing Ltd. and its affiliates do not guarantee the accuracy of, nor assume liability for the information presented here.

General

Protecting employees, co-workers and general public from injuries associated with the use of clips and clamps as used with rigging to lift materials.

Hazards Present

- Personnel Injury
- Damage to Property
-

Protective Mechanisms

- Hazard Assessment/Equipment Inspections
- Safe Work Practice/Procedure
- ERP (Emergency Response Plan)
- Training
- Inspections
- PPE

Do

- DO make sure you have the correct size of clip for the wire rope diameter
- DO consult the appropriate information table to know how many clips required, the amount of rope to turn back from the thimble, and the torque needed to tighten the nuts
- DO use at least 3 clips in making any prepared loop or thimble-eye termination for wire rope (especially for overhead lifting)

Do Not

- DO NOT attempt hoisting and rigging if you are not familiar or trained for the task. Ask for help

Supervisor Responsibility

- Supervisors are responsible to facilitate/or provide proper instruction on PPE and training

Employee Responsibility

- Ensure you are trained in hoisting & rigging
- Use of safe job procedure

➢ **Refer to SWP # 19 – Hoisting – Cranes**
➢ **Refer to SWP # 21 – Hoisting – Hand Signals**
➢ **Refer to SWP # 22 – Hoisting – Manual Material Hoist**
➢ **Refer to SWP # 23 – Hoisting – Rigging**
➢ **Refer to SWP # 24 – Hoisting – Use of Shackles**

See Table 1 – Cable clip Installation Table
See Table 2 – Installation Procedure

Rope Diameter (inches)	Minimum Number of Clips	Amount of Rope Turn-Back from Thimble (inches)	Torque in Foot-Pounds for Unlubricated Bolts
5/16	2	5 ½	30
3/8	2	6 ½	45
7/16	2	7	65
½	3	11 ½	65
9/16	3	12	95
5/8	3	12	95
3/4	4	18	130
7/8	4	19	225

Table 1

Table 2

STEP 1

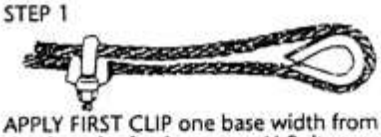

APPLY FIRST CLIP one base width from dead end of wire rope. U-Bolt over dead end. Live end rests in clip saddle. Tighten nuts evenly to recommended torque.

STEP 2

APPLY SECOND CLIP as close to loop as possible. U-Bolt over dead end. Turn nuts firmly but DO NOT TIGHTEN.

STEP 3

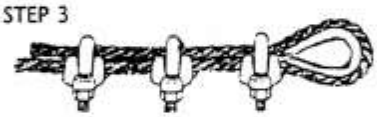

APPLY ALL OTHER CLIPS. Space evenly between first two and 6-7 rope diameters apart.

STEP 4

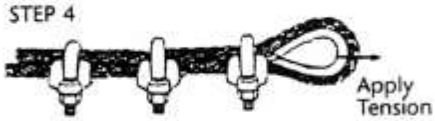

APPLY TENSION and tighten all nuts to recommended torque.

STEP 5

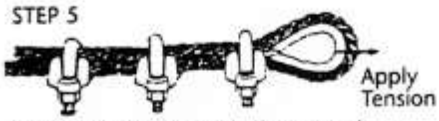

CHECK NUT TORQUE after rope has been in operation.

*** Regulatory Reference**
NB OHSA & Reg 91-191, (July 1, 2011) Part XV, Section 207(1)(b), 213(3)(a), 229(1)
NS OHSA & Reg S.N.S 1996, c.7, (June 12, 2013) Part 7, Section 70(1)
PE OHSA General Regs EC180/87; 43/06, (Jan, 2013) Part 46, Section 46.10
NL OHSA & Reg 5/12, (Jan 2012) Part XV, Section All

The information contained in this publication is intended for general use and may not apply to every circumstance. It is not a definitive guide to government legislation and does not relieve persons using this publication from their responsibilities under the Workplace Safety and Health Act or applicable legislation.
The appropriate regulations and statutes should always be consulted and adhered to. Atlantic Roofers Limited/North Shore Roofing Ltd. and its affiliates do not guarantee the accuracy of, nor assume liability for the information presented here.

General

It is imperative that crane operators and hand signaler are familiar with the system of signaling. The crane operator must ensure that the person signaling is clearly visible at all times.

Hazards Present

- Personnel Injury
- Damage to Property
-

Protective Mechanisms

- Hazard Assessment
- Training
- Safe Work Practice/Procedure
- PPE
- ERP (Emergency Response Plan)

Do

- DO be familiar with the internationally recognized system of standard hand signals
- DO know the signals for lifting, moving and landing if you are going to rig a load
- DO only have one person signaling the operator. BUT Anyone can give the STOP signal and it must be obeyed immediately
- DO give clear signals, barehanded when possible
- DO stop the operation if contact between you and the operator is broken for any reason
- DO use two-way radios instead of hand signals where a difficult lift demands voice communication

Do Not

- DO NOT use hand signals when distance or visibility prevents accurate communication with the operator
- DO NOT pass the load over anybody
- DO NOT have operator make a move until they receive and understand your signal

Supervisor Responsibility

- Supervisors are responsible to facilitate and/or provide proper instruction to their workers on protection requirements and training
- Necessary equipment

Employee Responsibility

- Signaller must be clearly visible to the crane operator
- Crane operator must only respond to hand or radio signals when given by the authorised signaller
- Crane operator shall only respond to signals from other persons in an emergency situation, ie: when the "stop" signal is given
- When the crane operator's ability to see hand signals from the signaller is impaired by inclement weather conditions or darkness, crane operations are to cease

- **Refer to SWP # 19 – Hoisting – Cranes**
- **Refer to SWP # 20 – Hoisting – Clips and Clamps**
- **Refer to SWP # 22 – Hoisting – Manual Material Hoist**
- **Refer to SWP # 23 – Hoisting – Rigging**
- **Refer to SWP # 24 – Hoisting – Use of Shackles**

See Table 3 – Crane Signals

Table 3

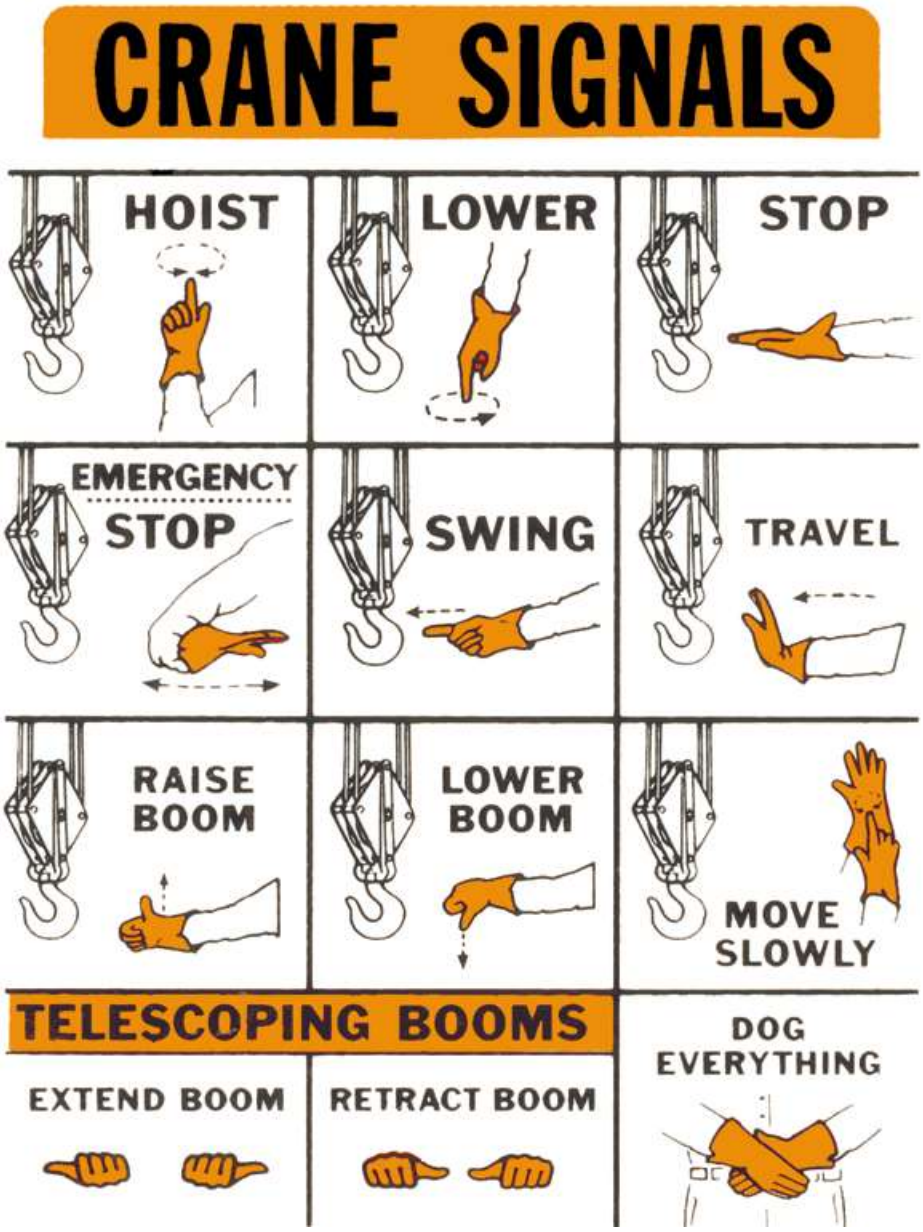

*** Regulatory Reference**
NB OHSA & Reg 91-191, (July 1, 2011) Part XV, Section 207(1)(b), 213(3)(a), 229(1)
NS OHSA & Reg S.N.S 1996, c.7, (June 12, 2013) Part 7, Section 70(1)
PE OHSA General Regs EC180/87; 43/06, (Jan, 2013) Part 46, Section 46.10
NL OHSA & Reg 5/12, (Jan 2012) Part XV, Section All

The information contained in this publication is intended for general use and may not apply to every circumstance. It is not a definitive guide to government legislation and does not relieve persons using this publication from their responsibilities under the Workplace Safety and Health Act or applicable legislation.
The appropriate regulations and statutes should always be consulted and adhered to. Atlantic Roofers Limited/North Shore Roofing Ltd. and its affiliates do not guarantee the accuracy of, nor assume liability for the information presented here.

General

A hoist is a device used to lift or move material. The lifting force is provided by a drum (or wheel) on which wraps a rope (wire or fibre) or a chain. There are different types of hoists – Electro-hydraulic, manal or lever operated, base mounted, or pendant cranes. These hoists are different in the way they move, but the precautions that should be taken when working with them are similar. Always follow the manufacturer's recommendations for the hoist you are using.

Hazards Present

• Personnel Injury	• Damage to Property	•

Protective Mechanisms

• Hazard Assessment	• Safe Work Practice/Procedure	• ERP (Emergency Response Plan)
• Training	• PPE	Inspections

Do

- DO inspect the hoist before lifting a load.
- DO keep wire rope (cable) and chain lubricated
- DO stand completely clear of the load
- DO seat the load properly in the hook
- DO move hoist controls smoothly. Remove slack from the sling and hoisting ropes before the load is lifted
- DO ensure all loose materials, parts, blocking and packing have been removed from the load before starting the lift
- DO make sure everyone is away from the load before starting to hoist

Do Not

- DO NOT use hoisting equipment for lifting people
- DO NOT pass a load over any persons
- DO NOT tip load. The load is unstable and harms the hook and hoist
- DO NOT insert the point of the hook in a link of the chain
- DO NOT hammer a sling into place
- DO NOT leave slings dangling from the load hook. Place sling hooks on the sling ring when carrying slings to the load
- DO NOT raise loads higher than necessary to clear objects
- DO NOT exceed hoist load limit

Supervisor Responsibility

- Supervisors are responsible to facilitate and/or provide proper instruction to their workers on protection requirements and training
- Necessary equipment

Employee Responsibility

- Signaller must be clearly visible to the operator
- Inspect all equipment prior to each use
- Know the safe load of the hoist. Do not exceed.

- **Refer to SWP # 19 – Hoisting – Cranes**
- **Refer to SWP # 20 – Hoisting – Clips and Clamps**
- **Refer to SWP # 21 – Hoisting – Hand Signals**
- **Refer to SWP # 23 – Hoisting – Rigging**
- **Refer to SWP # 24 – Hoisting – Use of Shackles**

How should you use a materials hoist safely?

- Know the safe load limit of the hoist. Do not exceed.
- Keep wire ropes and chains lubricated.
- Hoist from directly over the load. If not centered, the load may swing when lifted.
- Hang hoists solidly in the highest part of the hook area. Rigged this way, the hook support is directly in line with the hook shank
- Lever operated hoists can be used to pull in any direction, but a straight line pull must be maintained. Side pulling or lifting increases wear and sets up dangerous stress levels on hoist parts. Only one person should pull on hand, chain and lever hoists.
- When loading the lower hook, place the load directly in line with the hook shank. Loaded this way, the load chain makes a straight line from hook shank to hook shank.

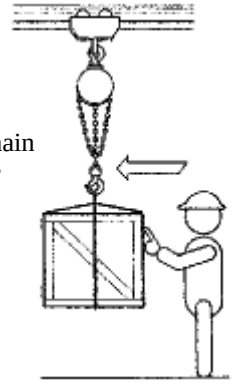

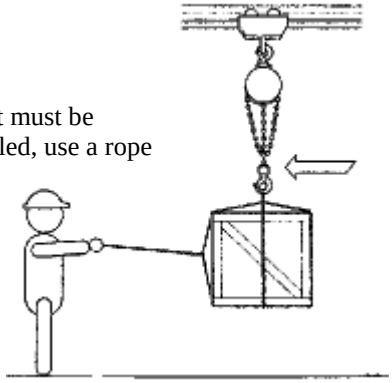

*** Regulatory Reference**
NB OHSA & Reg 91-191, (July 1, 2011) Part X, Section 109, 110, Part XV, Section 207 to 212
NS OHSA & Reg S.N.S 1996, c.7, (June 12, 2013) Part 1, Section 2(p), Part 7, Section 55 to 62, 68, 70, 72 to 76, 80
PE OHSA General Regs EC180/87; 43/06, (Jan, 2013) Part 34, Section 34.1 to 34.12, Part 35, Section 35.1 to 35.5
NL OHSA & Reg 5/12, (Jan 2012) Part XIV, Section 287 to 331, 351, 359

The information contained in this publication is intended for general use and may not apply to every circumstance. It is not a definitive guide to government legislation and does not relieve persons using this publication from their responsibilities under the Workplace Safety and Health Act or applicable legislation.
The appropriate regulations and statutes should always be consulted and adhered to. Atlantic Roofers Limited/North Shore Roofing Ltd. and its affiliates do not guarantee the accuracy of, nor assume liability for the information presented here.

General

Protecting workers from injuries associated with rigging procedures. Rigging of equipment, piping and valves is an integral part of construction operations

Hazards Present

- Personnel Injury
- Damage to Property
- Pinch Points

Protective Mechanisms

- Hazard Assessment
- Training
- Safe Work Practice/Procedure
- PPE
- ERP (Emergency Response Plan)
- Inspections

Do

- DO ensure you are competent in rigging procedures
- DO be acquainted with hand signals
- DO inspect all components, including hardware before use
- DO be aware of pinch points
- DO know what hardware to use. All fittings must be of adequate strength for the application
  - DO ensure you are in view of operator
- DO ensure you utilize a tag line
- DO ensure hoisting hooks are equipped with safety catches
- DO ensure load is centred
- DO be aware of the direction of the swing of load

Do Not

- DO NOT walk under suspended loads
- DO NOT lift when the visibility of riggers or hoist crew is impaired by snow, fog, rain, darkness or dust
- DO NOT carry out hoisting or rigging when the winds create hazards for workers and the general public
- DO NOT overload a rope
- DO NOT drag a rope along the ground or over rough or sharp edges
- DO NOT use cold ropes
- DO NOT attempt to repair slings. Replace is worn or damaged

Supervisor Responsibility

- Supervisors are responsible to facilitate and/or provide proper instruction to their workers on protection requirements and training
- Hazard analysis
- Worksite inspection

Employee Responsibility

- Review all relevant SWP's (ie; Clips, Clamps and Shackles, etc.)
- Ensure wire chockers, slings and other equipment are in good condition
- Follow rigging safe job procedure step by step

- **Refer to SWP # 19 – Hoisting – Cranes**
- **Refer to SWP # 20 – Hoisting – Clips and Clamps**
- **Refer to SWP # 21 – Hoisting – Hand Signals**
- **Refer to SWP # 22 – Hoisting – Manual Material Hoist**
- **Refer to SWP # 24 – Hoisting – Use of Shackles**

*** Regulatory Reference**

NB OHSA & Reg 91-191, (July 1, 2011) Part XV, Section 207 to 212
NS OHSA & Reg S.N.S 1996, c.7, (June 12, 2013) Part 1, Section 2(p), Part 7, Section 55 to 62, 68, 70, 72 to 76, 80
PE OHSA General Regs EC180/87; 43/06, (Jan, 2013) Part 34, Section 34.1 to 34.12, Part 35, Section 35.1 to 35.5
NL OHSA & Reg 5/12, (Jan 2012) Part XIV, Section 287 to 331, 351, 359

The information contained in this publication is intended for general use and may not apply to every circumstance. It is not a definitive guide to government legislation and does not relieve persons using this publication from their responsibilities under the Workplace Safety and Health Act or applicable legislation.
The appropriate regulations and statutes should always be consulted and adhered to. Atlantic Roofers Limited/North Shore Roofing Ltd. and its affiliates do not guarantee the accuracy of, nor assume liability for the information presented here.

General

Protecting workers from injuries associated with rigging procedures.

Hazards Present

• Personnel Injury	• Damage to Property	• Pinch Points

Protective Mechanisms

• Hazard Assessment	• Safe Work Practice/Procedure	• ERP (Emergency Response Plan)
• Training	• PPE	Inspections

Do

- DO use shackles manufactured of forged alloy steel
- DO check crown regularly for wear. Discard shackles noticeably worn at the crown
- DO check for wear, distortion, and opening up

Do Not

- DO NOT replace shackle pin with bolts. Pins are designed and manufactured to match shackle capacity
- DO NOT use a shackle where it will be pulled or loaded at an angle. This severely reduces its capacity and opens up the legs
- DO NOT use screw pin shackle if the pin can roll under load and unscrew
- DO NOT run the sling through a hook or shackle. The sling can slide in the hook or shackle and allow an unbalanced load to tip

Supervisor Responsibility

- Supervisors are responsible to facilitate and/or provide proper instruction to their workers on protection requirements and training
- Hazard analysis
- Worksite inspection

Employee Responsibility

- Review all relevant SWP's (ie; Clips, Clamps and Shackles, etc.)
- Ensure shackles, turnbuckles and other equipment are in good condition
- Follow rigging safe job procedure step by step

➢ **Refer to SWP # 19 – Hoisting – Cranes**
➢ **Refer to SWP # 20 – Hoisting – Clips and Clamps**
➢ **Refer to SWP # 21 – Hoisting – Hand Signals**
➢ **Refer to SWP # 22 – Hoisting – Manual Material Hoist**
➢ **Refer to SWP # 23 – Hoisting - Rigging**

*** Regulatory Reference**
NB OHSA & Reg 91-191, (July 1, 2011) Part XV, Section 207 to 212
NS OHSA & Reg S.N.S 1996, c.7, (June 12, 2013) Part 1, Section 2(p), Part 7, Section 55 to 62, 68, 70, 72 to 76, 80
PE OHSA General Regs EC180/87; 43/06, (Jan, 2013) Part 34, Section 34.1 to 34.12, Part 35, Section 35.1 to 35.5
NL OHSA & Reg 5/12, (Jan 2012) Part XIV, Section 287 to 331, 351, 359

The information contained in this publication is intended for general use and may not apply to every circumstance. It is not a definitive guide to government legislation and does not relieve persons using this publication from their responsibilities under the Workplace Safety and Health Act or applicable legislation.
The appropriate regulations and statutes should always be consulted and adhered to. Atlantic Roofers Limited/North Shore Roofing Ltd. and its affiliates do not guarantee the accuracy of, nor assume liability for the information presented here.

General

Good housekeeping is key in maintaining a safe, productive building project. It's important to maintain good housekeeping throughout all phases of construction. The area within and surrounding the construction site can be very hazardous to workers if debris is allowed to accumulate. Good housekeeping will reduce confusion on the project and will result in a safer, more efficient operation

Hazards Present

- Tripping/Slipping Injuries
- Fire
- Cuts/Punctures

Protective Mechanisms

- Manufacturers Recommendations
- PPE
- Provincial, Federal Regulations
- Company Rules
- Environmental Acts/Regulations

Do

- DO clean up or eliminate slipping hazards such as grease, oil, water, ice, snow or other liquids on walkways, ladders, stairways, scaffolds or other access ways or working areas
- DO clean up to eliminate tripping hazards such as tools, materials, debris
- DO reduce confusion by being tidy and orderly
- DO remove debris / garbage
- DO keep your work area clean and safe at all times

Do Not

- DO NOT throw or drop materials from upper levels unless the area below is properly barricaded and proper warnings are posted
- DO NOT obstruct roadways, access ways, aisles, stairways, scaffolds, and ladders

Supervisor Responsibility

- Supervisors are responsible to facilitate and/or provide proper instruction to their workers on protection requirements and training
- Compliance
- Enforcement

Employee Responsibility

- Do not allow extension cords, air hoses, welding leads, or oxygen and acetylene hoses to be placed where they create a tripping hazard
- Cooperate in keeping change rooms, toilets, first aid and drinking facilities in clean, sanitary condition. They are provided for your convenience and health
- Protruding nails, screws, or other materials in form lumber, boards, etc., must be immediately removed, bent over, or guarded to prevent puncture injuries
- Oily rags, waste, or other combustible debris shall be kept in metal containers provided for that purpose
- When cleaning up, do not throw or drop materials from upper levels unless the area below is properly barricaded and proper warnings are posted

*** Regulatory Reference**
NB OHSA & Reg 91-191, (July 1, 2011) Part II, Section 15, 16, 17, Part VIII, Section 57
NS OHSA & Reg S.N.S 1996, c.7, (June 12, 2013) Part 4, Section 24, Part 5, Section 32, 36 to 38
PE OHSA General Regs EC180/87; 43/06, (Jan, 2013) Part 5, Section All
NL OHSA & Reg 5/12, (Jan 2012) Part V, Section 31, 33, 34

The information contained in this publication is intended for general use and may not apply to every circumstance. It is not a definitive guide to government legislation and does not relieve persons using this publication from their responsibilities under the Workplace Safety and Health Act or applicable legislation.
The appropriate regulations and statutes should always be consulted and adhered to. Atlantic Roofers Limited/North Shore Roofing Ltd. and its affiliates do not guarantee the accuracy of, nor assume liability for the information presented here.

General

Protecting workers from injuries associated with the use of portable ladders. Portable ladders should only be used when there are no permanent or temporary stairways or work platforms available for task.

Hazards Present

- Tripping/Slipping Injuries
- Electrocution
- Personal Injury/Death

Protective Mechanisms

- Manufacturers Recommendations
- PPE
- Provincial, Federal Regulations
- Company Rules
- Safe Work Practices/Procedures
- ERP (Emergency Response Plan)

Do

- DO inspect ladders before each use
- DO tag out and remove defective ladders from service
- DO ensure surface is level and firm
- DO ensure ladder is tied off and set at the proper angle
- DO always use three points of contact when climbing up or down a ladder
- DO use CSA certified ladders
- DO Extend ladder 3 feet above parapet

Do Not

- DO NOT use defective ladders
- DO NOT paint wooden ladders
- DO NOT climb higher than the second step from the top
- DO NOT place ladder against an unsafe support
- DO NOT erect on boxes, tables, scaffold platforms, man lift platforms or on vehicles
- DO NOT permit conductive metal ladders or wire or wire reinforced wooden ladders in energized areas

Supervisor Responsibility

- Supervisors are responsible to facilitate and/or provide proper instruction to their workers on protection requirements and training
- Work site inspection
- Selection of equipment

Employee Responsibility

- All ladders shall be inspected prior to performing a task
- Conductive metal ladders or wire or wire reinforced wooden ladders shall not be permitted in energized areas
- Follow portable ladder safe job procedure
- All ladders used by the company's employees must be CSA certified

*** Regulatory Reference**
NB OHSA & Reg 91-191, (July 1, 2011) Part XI, Section All
NS OHSA & Reg S.N.S 1996, c.7, (June 12, 2013) Part 13, Section 148 to 152
PE OHSA General Regs EC180/87; 43/06, (Jan, 2013) Part 23, Section All
NL OHSA & Reg 5/12, (Jan 2012) Part XI, Section 148 to 156

The information contained in this publication is intended for general use and may not apply to every circumstance. It is not a definitive guide to government legislation and does not relieve persons using this publication from their responsibilities under the Workplace Safety and Health Act or applicable legislation.
The appropriate regulations and statutes should always be consulted and adhered to. Atlantic Roofers Limited/North Shore Roofing Ltd. and its affiliates do not guarantee the accuracy of, nor assume liability for the information presented here.

General

Protecting workers from injuries associated with the use of extension ladders. Extension ladders should only be used when there are no permanent or temporary stairways or work platforms available for task

Hazards Present

• Tripping/Slipping Injuries	• Electrocution	• Personal Injury/Death

Protective Mechanisms

• Manufacturers Recommendations • PPE	• Provincial, Federal Regulations • Company Rules	• Safe Work Practices/Procedures • ERP (Emergency Response Plan)

Do	**Do Not**
• DO inspect ladders before each use	• DO NOT use defective ladders
• DO tag out and remove defective ladders from service	• DO NOT paint wooden ladders
• DO ensure the ladder is on firm level ground. Do not lean sideways	• DO NOT climb higher than the second step from the top
• DO ensure ladder is tied off and set at the proper angle	• DO NOT place in front of a door that could open into the ladder causing it to fall
• DO always use three points of contact when climbing up or down a ladder	• DO NOT erect on boxes, tables, scaffold platforms, man lift platforms or on vehicles
• DO use CSA certified ladders	• DO NOT permit conductive metal ladders or wire or wire reinforced wooden ladders in energized areas
• DO use a spotter to hold the ladder whenever possible	• DO NOT tie or fasten ladders together to gain additional height
• DO Secure base when raising and never set up ladder when it is extended	• DO NOT lean the ladder against an overhead door – beware of automatic operation of the door
• DO ensure area is cleared of hazards and ensure non-skid devices or securing feet	• DO NOT over extend. Maintain minimum overlap of sections
• DO erect ladder with minimum 3 feet extending above roof line or working surface. Tie top at support points	•
• DO extend top section only from ground, never by bouncing or from the roof	

Supervisor Responsibility

- Supervisors are responsible to facilitate and/or provide proper instruction to their workers on protection requirements and training
- Work site inspection
- Selection of equipment

Employee Responsibility

- All ladders shall be inspected prior to performing a task
- Follow portable ladder safe job procedure

Angle and Extension

- Set extension ladder at proper 75.5 degree angle by placing ladder base a distance equal to ¼ total working length of ladder away from base of vertical support

  e.g. If the distance is less than 3 feet, place base of ladder a minimum of 3 feet from vertical support

A Up to and including 32 ft – 3 ft overlap
B 36 ft – 4 ft overlap
C Over 36 ft and including 48 ft – 5 ft overlap

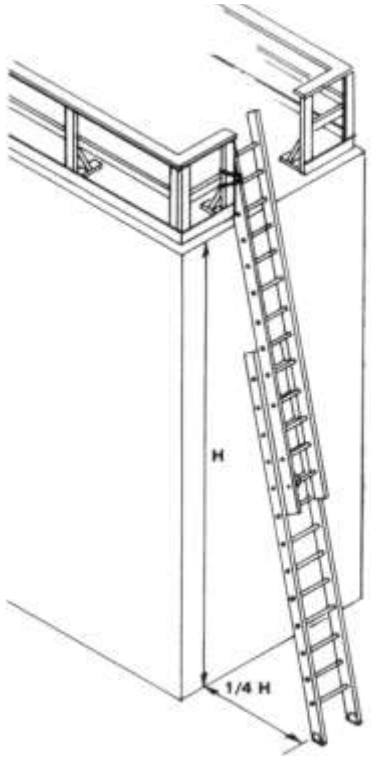

A Properly raised ladder

*** Regulatory Reference**
NB OHSA & Reg 91-191, (July 1, 2011) Part XI, Section All
NS OHSA & Reg S.N.S 1996, c.7, (June 12, 2013) Part 13, Section 148 to 152
PE OHSA General Regs EC180/87; 43/06, (Jan, 2013) Part 23, Section All
NL OHSA & Reg 5/12, (Jan 2012) Part XI, Section 148 to 156

The information contained in this publication is intended for general use and may not apply to every circumstance. It is not a definitive guide to government legislation and does not relieve persons using this publication from their responsibilities under the Workplace Safety and Health Act or applicable legislation.
The appropriate regulations and statutes should always be consulted and adhered to. Atlantic Roofers Limited/North Shore Roofing Ltd. and its affiliates do not guarantee the accuracy of, nor assume liability for the information presented here.

General

Protecting workers from injuries associated with the use of step ladders. Step ladders should only be used when there are no permanent or temporary stairways or work platforms available for task.

Hazards Present

- Tripping/Slipping Injuries
- Electrocution
- Personal Injury/Death

Protective Mechanisms

- Manufacturers Recommendations
- PPE
- Provincial, Federal Regulations
- Company Rules
- Safe Work Practices/Procedures
- ERP (Emergency Response Plan)

Do

- DO inspect ladders before each use
- DO tag out and remove defective ladders from service
- DO ensure all four feet are positioned on a firm, level surface
- DO ensure that the ladder is fully open and the bars are locked
- DO while ascending or descending the ladder, face the ladder and use three point contact at all times
- DO use CSA certified ladders
- DO ensure that the ladder is free of debris and oil. Clean as required
- DO keep your center of gravity between the side rails. Your belt buckle should never be outside the side rail

Do Not

- DO NOT use defective ladders
- DO NOT paint wooden ladders
- DO NOT work from the material shelf, the top or the top step of the ladder
- DO NOT use as a support for scaffolds
- DO NOT set the ladder up on mobile equipment
- DO NOT permit conductive metal ladders or wire or wire reinforced wooden ladders in energized areas

Supervisor Responsibility

- Supervisors are responsible to facilitate and/or provide proper instruction to their workers on protection requirements and training
- Work site inspection
- Selection of equipment

Employee Responsibility

- All ladders shall be inspected prior to performing a task
- Follow portable ladder safe job procedure

*** Regulatory Reference**
NB OHSA & Reg 91-191, (July 1, 2011) Part XI, Section All
NS OHSA & Reg S.N.S 1996, c.7, (June 12, 2013) Part 13, Section 148 to 152
PE OHSA General Regs EC180/87; 43/06, (Jan, 2013) Part 23, Section All
NL OHSA & Reg 5/12, (Jan 2012) Part XI, Section 148 to 156

The information contained in this publication is intended for general use and may not apply to every circumstance. It is not a definitive guide to government legislation and does not relieve persons using this publication from their responsibilities under the Workplace Safety and Health Act or applicable legislation.
The appropriate regulations and statutes should always be consulted and adhered to. Atlantic Roofers Limited/North Shore Roofing Ltd. and its affiliates do not guarantee the accuracy of, nor assume liability for the information presented here.

Materials – Handling / Storage / Transportation

SWP #29

General

Every material handling operation is different. Each part of the construction industry must take care to ensure safety practices are in place at every stage of handling various materials. Improper handling and storing of materials can cause costly injuries.

Hazards Present

- Property Damage
- Personal Injury/Death

Protective Mechanisms

- Manufacturers Recommendations
- Good Housekeeping
- Safe Work Practices/Procedures
- PPE
- Proper Packaging
- Proper Lifting & Loading

Do

- DO make sure the pallets you are using are in good condition
- DO tie and secure any unstable loads and repack them if necessary
- DO only move materials when necessary
- DO Secure load with proper securing mechanisms
- DO choose appropriate equipment in relation to the materials, dimensions, weight
- DO practice good housekeeping
- DO check materials upon arrival for spillage, leakage, WHMIS labels & MSDS sheets
- DO place material on a firm foundation

Do Not

- DO NOT exceed the recommended load limits of vehicles used in handling materials
- DO NOT overload equipment
- DO NOT obstruct passageways, traffic lanes, sprinkler or electrical devices with stacked material
- DO NOT restrict access with stacks of material

Supervisor Responsibility

- Supervisors are responsible to facilitate and/or provide proper instruction to their workers on protection requirements and training
- Work site inspection
- Selection of equipment

Employee Responsibility

- Seek help for bulky manual lifting
- Use proper lifting techniques for manual lifting
- Follow safe work practice / job procedure

*** Regulatory Reference**
NB OHSA & Reg 91-191, (July 1, 2011) Part VIII, Section All
NS OHSA & Reg S.N.S 1996, c.7, (June 12, 2013) Part 5, Section All
PE OHSA General Regs EC180/87; 43/06, (Jan, 2013) Part 43, Section All
NL OHSA & Reg 5/12, (Jan 2012) Part V, Section 31

The information contained in this publication is intended for general use and may not apply to every circumstance. It is not a definitive guide to government legislation and does not relieve persons using this publication from their responsibilities under the Workplace Safety and Health Act or applicable legislation.
The appropriate regulations and statutes should always be consulted and adhered to. Atlantic Roofers Limited/North Shore Roofing Ltd. and its affiliates do not guarantee the accuracy of, nor assume liability for the information presented here.

General

A hazardous material is any substance, chemical, or mixture of chemicals which can harm the body, either at the time of exposure or later. These materials may be in the form of a solid, liquid, gas or vapour, dust, fume or mist and may be either a physical hazard or a health hazard.

Hazards Present

• Explosion	• Personal Injury/Death	• Burns
• Acute Physical Effects	• Chronic Physical Effects	• Skin, eye, lung damage

Protective Mechanisms

• Manufacturers Recommendations	• ERP (Emergency Response Plan)	• Safe Work Practices/Procedures
• PPE	• WHMIS Training	• MSDS

Do	**Do Not**
• DO know what you are working with and how to use it safely	• DO NOT try to put out a fire unless you know what substance is involved and how to extinguish it
• DO use the right protective clothing and equipment for the job	• DO NOT keep leaking or damaged containers
• DO practice good housekeeping	• DO NOT mix products together
• DO be aware of warning signs (e.g. “Caution”, “Danger”, “Restricted area”, etc) If it is unclear what a sign means, ask for clarification.	• DO NOT dispose of oil, fuels, solvents, etc on the ground or in a stream or gulch
• DO check materials upon arrival for spillage, leakage, WHMIS labels & MSDS sheets	• DO NOT overfill containers. Containers with liquid wastes should be no more than 95% full
• DO know what to do in an emergency	• DO NOT accumulate chemical wastes for any extended period of time

Supervisor Responsibility

- Supervisors are responsible to facilitate and/or provide proper instruction to their workers on protection requirements and training
- Ensure MSDS information is available for all hazardous materials

Employee Responsibility

- Check warning labels
- Be aware of physical hazards and health hazards
- Know where to locate MSDS sheets

	Exploding bomb (for explosion or reactivity hazards)		**Flame** (for fire hazards)		**Flame over circle** (for oxidizing hazards)
	Gas cylinder (for gases under pressure)		**Corrosion** (for corrosive damage to metals, as well as skin, eyes)		**Skull and Crossbones** (can cause death or toxicity with short exposure to small amounts)
	Health hazard (may cause or suspected of causing serious health effects)		**Exclamation mark** (may cause less serious health effects or damage the ozone layer*)		**Environment*** (may cause damage to the aquatic environment)
	Biohazardous Infectious Materials (for organisms or toxins that can cause diseases in people or animals)				

*** Regulatory Reference**
NB OHSA & Reg 91-191, (July 1, 2011) Part VIII, Section 58 to 73
NS OHSA & Reg S.N.S 1996, c.7, (June 12, 2013) Part 1, Section 2(o), Part 5, Section 36 to 44
PE OHSA General Regs EC180/87; 43/06, (Jan, 2013) Part 5, Section 5.1(n), Part 43, Section 43.9 to 43.31, Part 44, Part 45, Section 45.17
NL OHSA & Reg 5/12, (Jan 2012) Part VI, Section 42, Part All, Part XIII, Section 283, Part XVII, Part 398

The information contained in this publication is intended for general use and may not apply to every circumstance. It is not a definitive guide to government legislation and does not relieve persons using this publication from their responsibilities under the Workplace Safety and Health Act or applicable legislation.
The appropriate regulations and statutes should always be consulted and adhered to. Atlantic Roofers Limited/North Shore Roofing Ltd. and its affiliates do not guarantee the accuracy of, nor assume liability for the information presented here.

General

Power operated elevating platforms are work platforms where the height of the platform may be adjusted by powered means using articulation, scissor mechanism, telescoping boom or tower, or any combination of these. An elevating work platform should only be operated and maintained by a competent employee who has been instructed in the machine's operation.

Hazards Present

• Overturning	• Falling	• Collision

Protective Mechanisms

• Manufacturers Recommendations	• ERP (Emergency Response Plan)	• Safe Work Practices/Procedures
• PPE	• Operator Training	• Company Rules

Do	**Do Not**
• DO read and follow the manufacturer's instructions and warning labels	• DO NOT operate any equipment if you feel drowsy or unwell
• DO wear appropriate PPE	• DO NOT operate a platform if the operating and maintenance manuals are not available
• DO ensure workers are properly trained in how to safely operate the specific elevating work platform they will be using	• DO NOT operate a platform if the rated capacity is not clearly marked on the platform
• DO ensure there is adequate lighting in the work area	• DO NOT exceed the rated load capacity of the platform
• DO operate the platform on firm and level surfaces only	• DO NOT use a platform without guardrails in place
• DO wear fall protection equipment that is properly secured to an anchorage point	• DO NOT use ladders or other devices on the platform to gain extra height
• DO ensure that a safe means is provided to get on and off the platform	• DO NOT stand or climb on guardrails
• DO lock or prevent unauthorized use when machine is unattended	• DO NOT work outdoors during a storm or high winds
• DO inspect the platform before each use	• DO NOT remove guardrails while raised
• DO use cordless power tools where possible to prevent cords being pinched or severed by the scissor mechanism	• DO NOT hang items over the outside of the platform
• DO ensure the elevating platform meets the requirements of the applicable CSA or ANSI standards	• DO NOT charge a leaky battery
• DO inspect the work location for ditches, drop-offs, holes, bumps, obstructions, slopes, debris, untamped earth, overhead obstructions, electrical wires and conductors, hazardous atmosphere, wind and weather conditions	• DO NOT place the platform against any structure to steady either the structure or the platform

Supervisor Responsibility

- Supervisors are responsible to facilitate/or provide proper instruction on PPE and training
- Ensure inspection is done prior to use and document on Inspection Form
- Ensure compliance and enforcement of safe work practices and job procedures
- Shall ensure that powered mobile equipment is maintained in safe working condition
- Have air and hydraulic lines, hoses and components maintained in safe operating condition
- Have equipment inspected visually and physically by a competent person on a weekly basis
- Have equipment lubricated only when at rest or as the manufacturer directs.
- Have defective parts repaired or replaced before being set in motion
- Ensure wire ropes, drums and sheaves are inspected visually on a daily basis by the operator
- Determine type of equipment required.
- Inspect work site

Employee Responsibility

- Operate the work platform safely and in accordance with the operating instructions and in compliance with applicable legislation.
- Ensure you have a valid operator's training certification
- Ensure ground is firm and level.
- Carry out job site inspection and walk around inspection of platform
- Ensure the safe working load of the work platform is not exceeded
- Watch out for overhead and ground hazards, traffic and pedestrians
- Shall check for the effectiveness of all safety devices daily before operating the equipment.
- Erect warning devices.
- Wear a safety harness attached to the machine when operating any aerial platform.
- Get on and off the platform when it is in lowered position.
- When leaving the equipment unattended, the operator shall park it on level ground, set the brake, lower the blades and bucket or safely block them, disengage the master clutch, stop the engine, and remove the key.

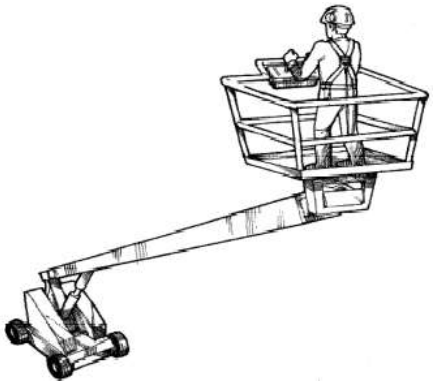

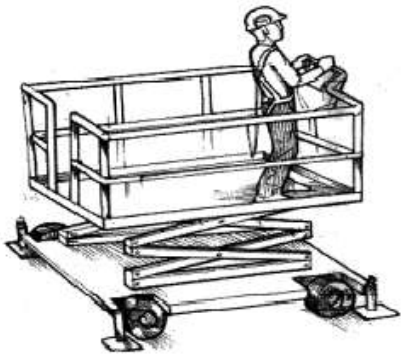

*** Regulatory Reference**
NB OHSA & Reg 91-191, (July 1, 2011) Part XI, Section 130, Part XV, Section 232
NS OHSA & Reg S.N.S 1996, c.7, (June 12, 2013) Part 1, Section 2(p), Part 7, Section 55 to 71
PE OHSA General Regs EC180/87; 43/06, (Jan, 2013) Part 33, Section 33.1 to 33.24
NL OHSA & Reg 5/12, (Jan 2012) Part XII, Section 250 to 279

The information contained in this publication is intended for general use and may not apply to every circumstance. It is not a definitive guide to government legislation and does not relieve persons using this publication from their responsibilities under the Workplace Safety and Health Act or applicable legislation.
The appropriate regulations and statutes should always be consulted and adhered to. Atlantic Roofers Limited/North Shore Roofing Ltd. and its affiliates do not guarantee the accuracy of, nor assume liability for the information presented here.

Note: This equipment is not fitted with rollover protection (ROPS), therefore, seatbelts are not required to be installed and used.

General

Protecting workers from critical injuries and fatalities associated with powered lift trucks. Only people who have training and experience can operate lift trucks. They must know hazards associated with the type of lift truck being used, the loads being handled and the environment in which the truck will be operated.

Hazards Present

• Overturning	• Falling	• Collision
• Property Damage	• General Injuries	

Protective Mechanisms

• Manufacturers Recommendations	• ERP (Emergency Response Plan)	• Safe Work Practices/Procedures
• PPE	• Operator Training	• Company Rules

Do	**Do Not**
• DO complete a checklist at the beginning of each shift/working day	• DO NOT operate any forklift truck that has a faults notification tag displayed, or one that has not been inspected
• DO wear a seatbelt/restraining system at all times when operation the forklift	• DO NOT operate any forklift truck if you have not been adequately trained and review any relevant risk assessments
• DO report any fault/defect observed during inspection/use and complete a Daily Inspection Form	• DO NOT load any forklift beyond its safe capacity
• DO ensure all users are trained and risk assessments have been completed/reviewed as necessary	• DO NOT brake suddenly (except in emergency) and avoid sudden turns
• DO ensure the forklift truck is suitable for its intended duty	• DO NOT operate a truck with greasy, oily, slippery boots, hands or gloves
• DO take great care when approaching crossings, doorways or corners	• DO NOT attempt to turn a truck on a slope or inline
• DO always operate within location speed limits and within approved operating areas. Take great care in any area where pedestrians or other vehicles may also be present	• DO NOT allow anyone to walk under the forks of a truck when elevated or behind the mast of a reach truck when the mast is extended
• DO only allow trained and licensed operators to use forklift trucks	• DO NOT operate a truck if the load obscures your vision
• DO always keep ignition keys under control to prevent unauthorised use	• DO NOT lift anyone using the forks of a truck. Lifting equipment such as a lifting cage must be used
• DO ensure there is sufficient overhead clearance to safely operate the truck mast	• DO NOT lift, lower or tilt the forks of a truck without the handbrake being applied
• DO always report accidents or incidents involving the use of a forklift truck	

Supervisor Responsibility

- Supervisors are responsible to facilitate and/or provide proper instruction to their workers on protection requirements and training
- Shall ensure that powered mobile equipment is maintained in safe working condition
- Have air and hydraulic lines, hoses and components maintained in safe operating condition
- Have equipment inspected visually and physically by a competent person on a weekly basis
- Have equipment lubricated only when at rest or as the manufacturer directs.
- Identify unsafe conditions and apply corrective measures
- Have defective parts repaired or replaced before being set in motion
- Ensure wire ropes, drums and sheaves are inspected visually on a daily basis by the operator

Employee Responsibility

- Ensure you are fully trained and certified to operate a lift truck
- Shall check for the effectiveness of all safety devices daily before operating the equipment.
- No part of the load must pass over any worker
- Handle all loads in accordance with the height and weight restrictions on the load chart
- If you do not have a clear view of the path, assistance from a signaller who has been instructed in a code of signals must be employed
- Make sure loads are secured
- Use barriers, warning signs or other safeguards where pedestrians are exposed to the risk of collision

*** Regulatory Reference**
NB OHSA & Reg 91-191, (July 1, 2011) Part XI, Section 130, Part XV, Section 232
NS OHSA & Reg S.N.S 1996, c.7, (June 12, 2013) Part 1, Section 2(p), Part 7, Section 55 to 71
PE OHSA General Regs EC180/87; 43/06, (Jan, 2013) Part 33, Section 33.1 to 33.24
NL OHSA & Reg 5/12, (Jan 2012) Part XII, Section 250 to 279

The information contained in this publication is intended for general use and may not apply to every circumstance. It is not a definitive guide to government legislation and does not relieve persons using this publication from their responsibilities under the Workplace Safety and Health Act or applicable legislation.
The appropriate regulations and statutes should always be consulted and adhered to. Atlantic Roofers Limited/North Shore Roofing Ltd. and its affiliates do not guarantee the accuracy of, nor assume liability for the information presented here.

General

Protecting operators and workers from injuries associated with mobile equipment. Scissor lifts, forklifts, and other mobile equipment play key roles on many construction sites. Mobile equipment can pose a risk to nearby workers, especially when the operator cannot see them.

Hazards Present

• Overturning	• Falling	• Collision

Protective Mechanisms

• Manufacturers Recommendations	• ERP (Emergency Response Plan)	• Safe Work Practices/Procedures
• PPE	• Operator Training	• Company Rules

Do

- DO ensure that workers are clear of the equipment before operating it
- DO carry the load no higher than necessary to avoid limiting your vision
- DO ensure that you are aware of all mobile equipment operating in and around the site
- DO wear high visibility apparel when working with or near mobile equipment
- DO a visual inspection of equipment pertaining to leaks, belts, etc. Record on Daily Inspection Form.
- DO use the three-point contact method when getting on or off equipment
- DO use a competent signaller if the operator's view of the intended path of travel is obstructed and/or a person could be endangered by the vehicle, machine or equipment and its load

Do Not

- DO NOT use cell phones while operating mobile equipment
- DO NOT take shortcuts across areas where mobile equipment is working
- DO NOT assume you have the right of way
- DO NOT attempt to turn a on a slope or inline
- DO NOT brake suddenly (except in emergency) and avoid sudden turns
- DO NOT exceed the rated load capacity of a platform
- DO NOT operate the equipment if the operating and maintenance manuals are not available

When using vehicles, machines or equipment near energized overhead electrical conductors, no part shall be brought closer than minimum distance listed in the following table:

Nominal phase-to-phase voltage rating	Minimum distance
750 or more volts, but no more than 150,000 volts	3 meters
more than 150,000 volts, but no more than 250,000 volts	4.5 meters
more than 250,000 volts	6 meters

Supervisor Responsibility

- Supervisors are responsible to facilitate and/or provide proper instruction to their workers on protection requirements and training
- Conduct site hazard assessment to identify unsafe conditions and apply corrective measures
- Ensure inspection is done on a daily basis

Employee Responsibility

- Ensure you are fully trained and certified to operate
- If you do not have a clear view of the path, assistance from a signaller who has been instructed in a code of signals must be employed
- Make sure loads are secured
- Use barriers, warning signs or other safeguards where pedestrians are exposed to the risk of collision

*** Regulatory Reference**
NB OHSA & Reg 91-191, (July 1, 2011) Part XI, Section 130, Part XV, Section 232
NS OHSA & Reg S.N.S 1996, c.7, (June 12, 2013) Part 1, Section 2(p), Part 7, Section 55 to 71
PE OHSA General Regs EC180/87; 43/06, (Jan, 2013) Part 33, Section 33.1 to 33.24
NL OHSA & Reg 5/12, (Jan 2012) Part XII, Section 250 to 279

The information contained in this publication is intended for general use and may not apply to every circumstance. It is not a definitive guide to government legislation and does not relieve persons using this publication from their responsibilities under the Workplace Safety and Health Act or applicable legislation.
The appropriate regulations and statutes should always be consulted and adhered to. Atlantic Roofers Limited/North Shore Roofing Ltd. and its affiliates do not guarantee the accuracy of, nor assume liability for the information presented here.

Mobile Equipment – Refueling

SWP #34

General

Protecting workers from injuries associated with refuelling operations. Refuelling of equipment is a daily task in construction industry which may be hazardous if not carried out properly.

Hazards Present

- Gasoline and Fuel Fires
- Spills
- Vapors
- Slips, trips and falls

Protective Mechanisms

- Manufacturers Recommendations
- ERP (Emergency Response Plan)
- Safe Work Practices/Procedures
- PPE
- Operator Training
- Fire Extinguisher

Do

- DO concentrate on the task at hand
- DO always turn off engine
- DO make sure the fire extinguisher is within reach
- DO chock the wheels if you feel the equipment may roll
- DO allow for fuel to expand on hot days
- DO be sure the fueling area is clearly marked
- DO clean up spills as quickly as possible
- DO keep the spout or nozzle in contact with the fuel tank when transferring from a can, mobile tank or fuel truck. Sparks could cause explosion.

Do Not

- DO NOT smoke while refueling
- DO NOT refuel near open flames
- DO NOT overfill the fuel tank
- DO NOT spill the fuel as it might ignite when it comes in contact when hot engine parts
- DO NOT leave the nozzle unattended
- DO NOT breathe the fuel vapors

Supervisor Responsibility

- Supervisors are responsible to facilitate and/or provide proper instruction to their workers on protection requirements and training
- Identify unsafe conditions and apply corrective measures

Employee Responsibility

- Ensure you are conversant with regulations
- Refuelling area is ventilated
- Ensure equipment is shutoff prior to refuelling
- Ensure there is no smoking or open flames in vicinity
- Avoid spillage on equipment or ground

*** Regulatory Reference**
NB OHSA & Reg 91-191, (July 1, 2011) Part XV, Section 213.2(1)(c), 228(d)
NS OHSA & Reg S.N.S 1996, c.7, (June 12, 2013) Part 5, Section 50
PE OHSA General Regs EC180/87; 43/06, (Jan, 2013) Part 33, Section 33.16(d)
NL OHSA & Reg 5/12, (Jan 2012) Part VIII, Section 251

The information contained in this publication is intended for general use and may not apply to every circumstance. It is not a definitive guide to government legislation and does not relieve persons using this publication from their responsibilities under the Workplace Safety and Health Act or applicable legislation.
The appropriate regulations and statutes should always be consulted and adhered to. Atlantic Roofers Limited/North Shore Roofing Ltd. and its affiliates do not guarantee the accuracy of, nor assume liability for the information presented here.

Mobile Equipment – Traffic Flow on Work Sites

General

Protecting workers from injuries associated with traffic congestion. Traffic at work sites must be regulated in such a manner to protect the safety and wellbeing of all personnel and equipment.

Hazards Present

- Collision
- Spills
- Injury or Death

Protective Mechanisms

- Manufacturers Recommendations
- ERP (Emergency Response Plan)
- Safe Work Practices/Procedures
- PPE
- Operator Training
- Signs & Barricades

Do

- DO perform a walk around inspection of the vehicle/equipment and document on Daily Inspection Form
- DO operate vehicles in a safe, courteous manner
- DO erect barricades to direct traffic safely around work area
- DO obtain authorization to enter restricted work areas or plant sites
- DO ensure communication device is available for summoning help in case of an accident
- DO wear appropriate PPE

Do Not

- DO NOT operate vehicles/equipment with excessive speed
- DO NOT operate if you feel drowsy or your full attention is not on task at hand
- DO NOT brake suddenly (except in emergency) and avoid sudden turns
- DO NOT assume you have the right of way
- DO NOT use cell phones while operating mobile equipment
- DO NOT operate a truck if the load obscures your vision

Supervisor Responsibility

- Supervisors are responsible to facilitate and/or provide proper instruction to their workers on protection requirements and training
- Identify unsafe conditions and apply corrective measures

Employee Responsibility

- Be aware of all traffic and pedestrians
- Ensure you inspect equipment and record on appropriate form prior to use
- Follow safe work practice/procedures

*** Regulatory Reference**
NB OHSA & Reg 91-191, (July 1, 2011) Part X, Section 91 to 93.1
NS OHSA & Reg S.N.S 1996, c.7, (June 12, 2013) Part 7, Section 76, Part 12, Section 137
PE OHSA General Regs EC180/87; 43/06, (Jan, 2013) Part 12, Section 12.12, Part 13, Section 13.6, Part 43, Section 43.3, Part 50, Section All
NL OHSA & Reg 5/12, (Jan 2012) Part XII, Section 274, Part XVI, Part All

The information contained in this publication is intended for general use and may not apply to every circumstance. It is not a definitive guide to government legislation and does not relieve persons using this publication from their responsibilities under the Workplace Safety and Health Act or applicable legislation.
The appropriate regulations and statutes should always be consulted and adhered to. Atlantic Roofers Limited/North Shore Roofing Ltd. and its affiliates do not guarantee the accuracy of, nor assume liability for the information presented here.

General

Protecting workers from injuries associated with an office environment. Traffic at work sites must be regulated in such a manner to protect the safety and wellbeing of all personnel and equipment.

Hazards Present

- Collision
- Spills / Falls
- Cuts / Burns

Protective Mechanisms

- Manufacturers Recommendations
- ERP (Emergency Response Plan)
- Safe Work Practices/Procedures
- PPE
- MSDS
- Provincial Fire Code

Do

- DO Ensure you are conversant with emergency evacuation
- DO be sure that all electrical cords are in good condition and are not overloaded
- DO ensure that computer monitors are adjusted to correct height and kept clean
- DO make sure floors and aisles are kept clean and not cluttered
- DO ensure proper type of fire extinguisher is available

  DO operate microwave according to manufacturer's specifications
- DO make sure the paper cutter has a proper guard and guard is closed when not in use
- DO report accidents/incidents no matter how small

Do Not

- DO NOT open more than one filing cabinet drawer at a time. Close when not in use
- DO NOT rest extension cords on steam pipes or other metallic surfaces
- DO NOT store heavy objects on upper shelves
- DO NOT lean back in chair and put feet on desk
- DO NOT store pencils in a glass on the desk with points upward
- DO NOT move desks or file cabinets unless using special dollies
- DO NOT try to move or grab a falling fan. Ensure fan is secured in place
- DO NOT face windows, unshielded lamps or other sources of glare

Supervisor Responsibility

- Supervisors are responsible to facilitate and/or provide proper instruction to their workers on protection requirements and training
- Identify unsafe conditions and apply corrective measures

Employee Responsibility

- Be conversant with emergency evacuation procedures
- Follow safe work practice/procedures

*** Regulatory Reference**

NB OHSA & Reg 91-191, (July 1, 2011) Part II, Section 4 to 8, 15 to 17, Part 3, Section All, Part IV, Section 26, Part VII, Section 38 to 48

NS OHSA & Reg S.N.S 1996, c.7, (June 12, 2013) Part 3, Section 9 to 13, Part 4, Section All, Part 5, Section 26 to 29

PE OHSA General Regs EC180/87; 43/06, (Jan, 2013) Part 2 to 9, Section All

NL OHSA & Reg 5/12, (Jan 2012) Part V, Section 26, 33, 36, 38 to 41, Part VI, Section All

The information contained in this publication is intended for general use and may not apply to every circumstance. It is not a definitive guide to government legislation and does not relieve persons using this publication from their responsibilities under the Workplace Safety and Health Act or applicable legislation.

The appropriate regulations and statutes should always be consulted and adhered to. Atlantic Roofers Limited/North Shore Roofing Ltd. and its affiliates do not guarantee the accuracy of, nor assume liability for the information presented here.

General

Protecting workers from injuries associated with press brake machines. These are mechanical or hydraulic machines for bending sheet metal and plate material. Press brakes are an unforgiving piece of machinery and a frequent cause of workplace amputations.

Hazards Present

- Amputation
- Cuts
- Trapped body parts

Protective Mechanisms

- Manufacturers Recommendations
- ERP (Emergency Response Plan)
- Safe Work Practices/Procedures
- PPE
- Guards
- Training

Do

- DO ask for help to safely use the metal brake
- DO maintain a clear area and move items that will be in your way to maneuver large sheets safely
- DO mark out the areas to bend before bending to reduce handling
- DO keep working parts well lubricated and free from rust and dirt
- DO familiarize yourself with and check all machine operations and controls
- DO ensure no slip/trip hazards are present in workspaces and walkways
- DO make sure fingers and limbs are clear before operating the brake

Do Not

- DO NOT use faulty equipment
- DO NOT wear rings and jewelry or loose baggy clothing
- DO NOT remove or adjust guards or safety devices except by authorized person for maintenance purposes
- DO NOT attempt to bend metal that is beyond the machine's capacity with respect to thickness, shape or type
- DO NOT attempt to bend rod, wire, strap, or spring steel sheets

Supervisor Responsibility

- Supervisors are responsible to facilitate and/or provide proper instruction to their workers on protection requirements and training
- Identify unsafe conditions and apply corrective measures

Employee Responsibility

- Be conversant with emergency procedures
- Follow safe work practice/procedures

*** Regulatory Reference**
NB OHSA & Reg 91-191, (July 1, 2011) Part V, Section All, Part VII, Section 38 to 43, 48, Part VII, Section 52, 53, Part XVI, Section 235 to 245
NS OHSA & Reg S.N.S 1996, c.7, (June 12, 2013) Part 3, Section 9 to 12, Part 5, Section 26, 27, 32, Part 8, Section 84 to 89
PE OHSA General Regs EC180/87; 43/06, (Jan, 2013) Part 8, Section All, Part 30, Section 30.1 to 30.10, Part 31, All
NL OHSA & Reg 5/12, (Jan 2012) Part III, Section 17 to 19, 24, Part VI, Section 56, 68, Part VII, Section All, Part VIII, Section 87 to 95, 101, 102

The information contained in this publication is intended for general use and may not apply to every circumstance. It is not a definitive guide to government legislation and does not relieve persons using this publication from their responsibilities under the Workplace Safety and Health Act or applicable legislation.
The appropriate regulations and statutes should always be consulted and adhered to. Atlantic Roofers Limited/North Shore Roofing Ltd. and its affiliates do not guarantee the accuracy of, nor assume liability for the information presented here.

General

Protecting workers from eye injuries associated with dust or chemicals, or to the risk of impact with tools, materials or flying debris.

Hazards Present

- Puncture
- Eye Abrasions
- Loss of Vision

Protective Mechanisms

- Manufacturers Recommendations
- PPE
- Safe Work Practices/Procedures

Do

- DO perform a workplace hazard assessment to determine the appropriate type of eyewear
- DO ensure that eyewear meets CSA or ANSI requirements
- DO wear safety eyewear over prescription glasses
- DO wear a face shield if there is risk of injury to other parts of your face
- DO wear polycarbonate or plastic lenses if there is a risk of impact
- DO wear safety eyewear with side shields if you are exposed to hazards from the side

Do Not

- DO NOT wear contact lenses when working in dry, dusty or chemically charged environments
- DO NOT wear polycarbonate or plastic lenses if you are exposed to high temperatures or corrosive chemicals
- DO NOT rely on prescription eyewear to protect against worksite dangers

Supervisor Responsibility

- Supervisors are responsible to facilitate and/or provide proper instruction to their workers on protection requirements and training
- Identify unsafe conditions and apply corrective measures

Employee Responsibility

- Be conversant with emergency procedures
- Follow safe work practice/procedures
- Wear appropriate PPE

*** Regulatory Reference**
NB OHSA & Reg 91-191, (July 1, 2011) Part II, Section 11, Part VII, Section 38, 39, 42(d), Part IX, Section 89(i)
NS OHSA & Reg S.N.S 1996, c.7, (June 12, 2013) Part 3, Section 10, Part 4, Section 23
PE OHSA General Regs EC180/87; 43/06, (Jan, 2013) Part 2, Section 2.6(3)(a), Part 29, Section 29.7, Part 45, Section 45.7 to 45.12, Part 50, Section 50.6
NL OHSA & Reg 5/12, (Jan 2012) Part VI, Section 42(11), 63, Part VII, Section 75 to 77, Part VIII, Section 106(7)(e)

The information contained in this publication is intended for general use and may not apply to every circumstance. It is not a definitive guide to government legislation and does not relieve persons using this publication from their responsibilities under the Workplace Safety and Health Act or applicable legislation.
The appropriate regulations and statutes should always be consulted and adhered to. Atlantic Roofers Limited/North Shore Roofing Ltd. and its affiliates do not guarantee the accuracy of, nor assume liability for the information presented here.

General

Protecting workers from possible foot or leg injuries from falling or rolling objects or from crushing or penetrating materials. Also, employees whose work involves exposure to hot substances, corrosive materials or electrical hazards must have protective gear to protect legs and feet.

Hazards Present

- Punctures / Burns
- Crushing
- Electrocution

Protective Mechanisms

- Manufacturers Recommendations
- PPE
- Safe Work Practices/Procedures

Do

- DO use footwear that meets CSA / ANSI standards
- DO conduct a hazard assessment to determine the appropriate type of footwear
- DO inspect footwear prior to use for wear and tear, cracks, holes, separation of materials, broken buckles or laces.
- DO practice effective housekeeping
- DO ensure the steel toe cap covers the whole length of the toes
- DO ensure you have the appropriate type of footwear for the weather conditions

Do Not

- DO NOT wear footwear that causes discomfort, pain and fatigue
- DO NOT stand or work in a way that could cause your feet to get caught between objects, moving vehicles or conveyor belts
- DO NOT use footwear that aggravates existing foot problems
- DO NOT wear shoes with heels higher than 5 cm (2 inches)
- DO NOT wear flat shoes
- DO NOT wear footwear that changes the shape of your foot. (e.g. too narrow)

Supervisor Responsibility

- Supervisors are responsible to facilitate and/or provide proper instruction to their workers on protection requirements and training
- Identify unsafe conditions and apply corrective measures

Employee Responsibility

- Be conversant with emergency procedures
- Follow safe work practice/procedures
- Wear appropriate PPE

*** Regulatory Reference**
NB OHSA & Reg 91-191, (July 1, 2011) Part VII, Section 41, Part X, Section 102(7)
NS OHSA & Reg S.N.S 1996, c.7, (June 12, 2013) Part 3, Section 12, Part 13, Section 139(2)
PE OHSA General Regs EC180/87; 43/06, (Jan, 2013) Part 5, Section 5.1(h), Part 45, Section 45.15. 45.16
NL OHSA & Reg 5/12, (Jan 2012) Part VII, Section 80

The information contained in this publication is intended for general use and may not apply to every circumstance. It is not a definitive guide to government legislation and does not relieve persons using this publication from their responsibilities under the Workplace Safety and Health Act or applicable legislation.
The appropriate regulations and statutes should always be consulted and adhered to. Atlantic Roofers Limited/North Shore Roofing Ltd. and its affiliates do not guarantee the accuracy of, nor assume liability for the information presented here.

General

Protecting workers from possible hand injuries from being crushed, mangled or even amputated. Small cuts or scrapes on fingers, knuckles and palms that are exposed to dirt or chemicals can lead to serious infection. Your hands are an important tool when performing any on the job task in construction.

Hazards Present

- Punctures / Burns
- Crushing / Cuts
- Cold / Heat

Protective Mechanisms

- Manufacturers Recommendations
- PPE
- Safe Work Practices/Procedures

Do

- DO choose gloves that are comfortable and flexible enough for easy use of your hands
- DO conduct a hazard assessment to determine the appropriate type of hand protection
- DO ensure you have the appropriate type of hand protection for the weather conditions
- DO always have the proper training for the task or equipment
- DO always wear the right gloves when working with chemicals

Do Not

- DO NOT choose gloves that are so tight they reduce blood flow to your fingers
- DO NOT stand or work in a way that could cause your hands to get caught between objects, moving vehicles or conveyor belts
- DO NOT wear loose fitting gloves that can get caught in machinery or cause you to grip items awkwardly or too hard
- DO NOT use fingers or hands to feed items into a machine. Use a push block
- DO NOT ignore minor hand injuries. They could become infected

Supervisor Responsibility

- Supervisors are responsible to facilitate and/or provide proper instruction to their workers on protection requirements and training
- Identify unsafe conditions and apply corrective measures

Employee Responsibility

- Be conversant with emergency procedures
- Follow safe work practice/procedures
- Wear appropriate PPE

*** Regulatory Reference**
NB OHSA & Reg 91-191, (July 1, 2011) Part II, Section 6, 7(b)(ii), Part V, Section 33.2
NS OHSA & Reg S.N.S 1996, c.7, (June 12, 2013) Part 4, Section 20, Part 16, Section 193
PE OHSA General Regs EC180/87; 43/06, (Jan, 2013) Part 4, Section 4.1(d)(ii), Part 45, Section 45.13
NL OHSA & Reg 5/12, (Jan 2012) Part VII, Section 70 to 73, 78

The information contained in this publication is intended for general use and may not apply to every circumstance. It is not a definitive guide to government legislation and does not relieve persons using this publication from their responsibilities under the Workplace Safety and Health Act or applicable legislation.
The appropriate regulations and statutes should always be consulted and adhered to. Atlantic Roofers Limited/North Shore Roofing Ltd. and its affiliates do not guarantee the accuracy of, nor assume liability for the information presented here.

General

In construction, a hard hat is a critical piece of personal protection. It is the last line of defence against objects impacting one of your most vital assets – your head. If your hard hat is not in good condition or used properly, the consequences could be tragic.

Hazards Present

- Punctures / Burns
- Crushing / Cuts
- Cold / Heat

Protective Mechanisms

- Manufacturers Recommendations
- PPE
- Safe Work Practices/Procedures

Do

- DO ensure the head protection complies with CSA standards
- DO maintain headwear according to the manufacturer's instructions
- DO use attachments (earmuffs/face shields) that have been designed specifically for use with the specific headwear used
- DO keep your hat clean and free of solvents, adhesives, grease and oil
- DO wash with mild detergent and rinse thoroughly
- DO remove from service any headgear if its serviceability is in doubt
- DO replace headgear that has been subjected to a blow even though damage cannot be seen

Do Not

- DO NOT leave your hard hat on the dashboard of a vehicle. The heat from the sun could compromise the strength of the hard hat
- DO NOT drill, remove peaks, alter the shell or suspension in any way
- DO NOT use solvents or paints on the shell. (makes shell "break down")
- DO NOT put chin straps over the brims of certain classes of headgear
- DO NOT carry anything in the hard hat while wearing the hard hat
- DO NOT apply metallic stickers as they may conduct radiant heat from the sun creating a "hot spot" which would weaken the plastic
- DO NOT hide damage with stickers

Supervisor Responsibility

- Supervisors are responsible to facilitate and/or provide proper instruction to their workers on protection requirements and training
- Identify unsafe conditions and apply corrective measures

Employee Responsibility

- Be conversant with emergency procedures
- Follow safe work practice/procedures
- Wear appropriate PPE

*** Regulatory Reference**
NB OHSA & Reg 91-191, (July 1, 2011) Part VII, Section 40
NS OHSA & Reg S.N.S 1996, c.7, (June 12, 2013) Part 3, Section 11
PE OHSA General Regs EC180/87; 43/06, (Jan, 2013) Part 45, Section 45.5, 45.6
NL OHSA & Reg 5/12, (Jan 2012) Part VI, Section 64, Part VII, Section 74

The information contained in this publication is intended for general use and may not apply to every circumstance. It is not a definitive guide to government legislation and does not relieve persons using this publication from their responsibilities under the Workplace Safety and Health Act or applicable legislation.
The appropriate regulations and statutes should always be consulted and adhered to. Atlantic Roofers Limited/North Shore Roofing Ltd. and its affiliates do not guarantee the accuracy of, nor assume liability for the information presented here.

PPE – Hearing Protection

SWP #42

General

Many workers are overexposed to noise, either from their own work or from ambient noise. In time, overexposure decreases our ability to hear. It is possible to slow down or stop noise-induced hearing loss by taking precautions.

Hazards Present

- Hearing Loss

Protective Mechanisms

- Manufacturers Recommendations
- PPE
- Safe Work Practices/Procedures

Do

- DO use earplugs or earmuffs in noisy environments
- DO make sure your earplugs or earmuffs fit comfortably
- DO clean reusable earplugs after each use

Do Not

- DO NOT reuse disposable earplugs
- DO NOT stand too close to noisy machinery for a long time
- DO NOT share earplugs with your co-workers

Overexposure

It's important to know that overexposure to noise doesn't necessarily take a long time. Short periods of very high noise can cause overexposure. For example, working only 15 minutes with a gas-powered quick-cut saw will lead to overexposure for that day.

Noise is generally measured in decibels (dB). The scale commonly used to measure noise that may harm human hearing is the A scale. Decibels on the A scale are therefore described as dBA.

You should wear hearing protection if you're exposed to noise levels such as:

- More than 85 dBA for 8 hours
- More than 88 dBA for 4 hours
- More than 91 dBA for 2 hours

Most power tools and equipment used in construction operate well over these levels. Some examples are:

- Brake Presses 86-93 dBA
- Hand-held Grinder 90-95 dBA
- Table Saw 87-94 dBA
- Hammer Drill 89-104 dBA
- Cutting Roof Deck 90-100 dBA
- Reciprocating Saw 86-105 dBA
- Drill 87-98 dBA
- Cordless Drill 98-100 dBA
- Skill Saw 98-105 dBA

Supervisor Responsibility

- Supervisors are responsible to facilitate and/or provide proper instruction to their workers on protection requirements and training
- Identify unsafe conditions and apply corrective measures

Employee Responsibility

- Follow safe work practice/procedures
- Wear appropriate PPE

*** Regulatory Reference**

NB OHSA & Reg 91-191, (July 1, 2011) Part V, Section 29 to 33, Part VI, Section 48
NS OHSA & Reg S.N.S 1996, c.7, (June 12, 2013) Part 3, Section 9
PE OHSA General Regs EC180/87; 43/06, (Jan, 2013) Part 8, Section All
NL OHSA & Reg 5/12, (Jan 2012) Part VI, Section 68

The information contained in this publication is intended for general use and may not apply to every circumstance. It is not a definitive guide to government legislation and does not relieve persons using this publication from their responsibilities under the Workplace Safety and Health Act or applicable legislation. The appropriate regulations and statutes should always be consulted and adhered to. Atlantic Roofers Limited/North Shore Roofing Ltd. and its affiliates do not guarantee the accuracy of, nor assume liability for the information presented here.

General

To protect you from breathing contaminated air, you may be required to wear a respirator. Examples of dangerous air contaminants are gases and vapors, dusts, fibres, mists, fumes, bacteria, spores, and pollen.

Hazards Present

- Gases and Vapors
- Fumes
- Dust

Protective Mechanisms

- Manufacturers Recommendations
- PPE
- Safe Work Practices/Procedures

Do

- DO check that you have the right respirator for the job
- DO make sure you are instructed and trained on how to fit and wear it, clean, inspect, maintain and store it
- DO fit test when you get it and at least once a year
- DO seal check each time you put it on
- DO change filters on a regular basis
- DO report any respirator damage to your supervisor

Do Not

- DO NOT use if respirator is damaged
- DO NOT use a disposable respirator if clogged or difficult to breathe through. Replace it
- DO NOT allow a respirator to be worn before an evaluation is complete
- DO NOT allow tight fitting face pieces to be worn by employees who have facial hair that comes between the sealing surface of the face piece and the face

Types of Respirators

Air Purifying purifies and filters the air drawn through them. They do not **supply** air or oxygen. They can only purify air in the surrounding atmosphere. If the oxygen content in the surrounding air is less than 19.5%, you cannot use the air purifying respirator. You will need a supplied air respirator.

Supplies air Respirators supplies air. The air comes from a cylinder or a compressor. They provide the best protection but have limitations. E.g. problems of weight, limited air supply and hoses can get tangled or snagged.

Supervisor Responsibility

- Supervisors are responsible to facilitate and/or provide proper instruction to their workers on protection requirements and training
- Identify unsafe conditions and apply corrective measures

Employee Responsibility

- Wear your respirator when required and follow safe work practice/procedures
- Participate in the selection and fitting of your respirator

*** Regulatory Reference**
NB OHSA & Reg 91-191, (July 1, 2011) Part III, Section 24 to 25.2, Part VII, Section 45 to 47
NS OHSA & Reg S.N.S 1996, c.7, (June 12, 2013) Part 3, Section 13
PE OHSA General Regs EC180/87; 43/06, (Jan, 2013) Part 45, Section 45.17 to 45.20, Part 49, Section 49.15, 49.16, 49.21
NL OHSA & Reg 5/12, (Jan 2012) Part VI, Section 46(6)(a), 46(7), 47(5)(6), 69(9), Part VII, Section 83 to 86, Part XXI, Section 457

The information contained in this publication is intended for general use and may not apply to every circumstance. It is not a definitive guide to government legislation and does not relieve persons using this publication from their responsibilities under the Workplace Safety and Health Act or applicable legislation.
The appropriate regulations and statutes should always be consulted and adhered to. Atlantic Roofers Limited/North Shore Roofing Ltd. and its affiliates do not guarantee the accuracy of, nor assume liability for the information presented here.

General

Roofing kettles are designed and manufactured for heating of roofing asphalt and coal tar pitch of the types and grades which can be melted by directly applied heat. Misuse of this equipment could result in damage or injury.

Hazards Present

• Burns	• Fires	• Explosions

Protective Mechanisms

• Manufacturers Recommendations • Burn proof gloves	• ERP (Emergency Response Plan) • Face Shield • Protective Clothing	• Safe Work Practices/Procedures • Training

Do	**Do Not**
• DO have training to operate kettle	• DO NOT fire burners at full thrust until 150 mm (6 inches) of melt covers the heating tubes
• DO set up kettles on level ground, clear of debris and flammable materials	• DO NOT use oversized burners in kettles. Tubes can become overheated, creating a fire or explosion hazard
• DO use a hand held thermometer to periodically check the melt temperature	• DO NOT panic if a fire occurs. Close kettle lids and turn off burners
• DO inspect all equipment prior to use. Record on daily Inspection Form.	• DO NOT load whole kegs into the kettle
• DO open exhaust stack cover before firing the burner	• DO NOT leave kettle unattended
• DO use caution when lighting burners. On a bright day the flame may not be visible	• DO NOT store combustible materials near the kettle
• DO keep the outside of kettle clean. A build-up of asphalt can create a fire that is very difficult to extinguish	• DO NOT tow kettle when contents are above the “Towing Level” mark shown on the outside of the tank
• DO have a fully charged dry chemical fire extinguisher available at the kettle	• DO NOT tow at speeds in excess of 80 Km/h. Make certain the tow hitch and safety chains are properly attached
• DO use extra caution when lowering cold product. Slowly lower product into the vat	• DO NOT operate the pump unless the flues are fully covered with material hot enough to flow freely and the roof line is erected and fastened securely into place
• DO make sure burners are extinguished and fuel supplies are shut off before leaving a job site	

Supervisor Responsibility

- Supervisors are responsible to facilitate and/or provide proper instruction to their workers on protection requirements and training
- Identify unsafe conditions and apply corrective measures

Employee Responsibility

- Be conversant with emergency procedures
- Read and follow manufacturer's instructions
- Follow safe work practice/procedures
- Wear appropriate PPE

There are various types and makes of kettles, and it is important to follow the manufacturer's instructions for use.

*** Regulatory Reference**

NB OHSA & Reg 91-191, (July 1, 2011) Part VII, Section 38 to 44, Part VIII, Section 75 to 79, Part XVI, Section 253, 254, Part XVIII, Section 275 to 277

NS OHSA & Reg S.N.S 1996, c.7, (June 12, 2013) Part 3, Section 9 to 13, Part 5, Section 47 to 49

PE OHSA General Regs EC180/87; 43/06, (Jan, 2013) Part 25, Section 25.2 to 25.4, Part 30, Section 30.1 to 30.10, Part 45, Section 45.1 to 45.22

NL OHSA & Reg 5/12, (Jan 2012) Part III, Section 18, Part V, Section 39, 41, Part VII, Section 71 to 75, 79 to 82, Part VIII, Section 88 to 94, 96, Part XX, Section All, Part XXI, Section 453

The information contained in this publication is intended for general use and may not apply to every circumstance. It is not a definitive guide to government legislation and does not relieve persons using this publication from their responsibilities under the Workplace Safety and Health Act or applicable legislation.
The appropriate regulations and statutes should always be consulted and adhered to. Atlantic Roofers Limited/North Shore Roofing Ltd. and its affiliates do not guarantee the accuracy of, nor assume liability for the information presented here.

General

Protecting workers from injuries associated with the use of chain saws.

Hazards Present

- Kickback
- Burns
- Electrocution
- Dismemberment

Protective Mechanisms

- Manufacturers Recommendations
- PPE
- Safe Work Practices/Procedures
- Equipment Inspections
- Training

Do

- DO keep the cutting area clear of others
- DO keep the chain clean, sharp and lubricated
- DO cut while standing slightly to the side, out of the plane of the cutting chain
- DO maintain a full throttle setting while cutting to maximize your productivity and to reduce fatigue for safer operation
- DO bring the saw up to speed before starting cuts
- DO keep both hands on the saw handles
- DO let the saw come to a complete stop before reaching for the chain or blade
- DO maintain a proper grip so that the saw does not slip or you lose control
- DO use a cord rated for outdoor use when running an electric saw
- DO always wait until the saw stops completely before setting the tool down
- DO always stop the saw before leaving it.

Do Not

- DO NOT touch a hot muffler
- DO NOT cut above chest height
- DO NOT use the bar for leverage, it's there to guide and support the cutting chain
- DO NOT push the saw. Let the saw do the work. If you find that you have to push, stop and sharpen the chain
- DO NOT bury the tip in wood
- DO NOT refuel a hot saw
- DO NOT drop start the saw
- DO NOT operate a saw when fatigued
- DO NOT operate the saw if the chain breaks or any other safety feature of the tool is disabled
- DO NOT leave the saw running unattended
- DO NOT attempt to replace or sharpen the saw unless you are trained and competent to do so

Supervisor Responsibility

- Supervisors are responsible to facilitate and/or provide appropriate training as necessary to their workers on the proper use of a chain saw
- Monitor the use of chain saws by workers and ensure that all workers use safe work practices and that unsafe use of the tool is identified and corrected
- Monitor the condition of the chain saws and take appropriate corrective action when the tool is defective
- Ensure the chain saws are maintained according to the manufacturer's specifications

Employee Responsibility

- Read and follow safe work practice
- Do not wear any type of loose or dangling apparel and ensure that long hair is confined well away from the rotating parts of the tool
- Clamp small or loose workpieces in some manner that will prevent them from moving during the cut

Binding is caused when the material being cut clamps down and stalls the cutting chain inside the kerf (or cut).

Be careful in the event the material closes in and pinches the saw. The push force, which is exerted when the top chain is pinched, can add unexpectedly to any pull force you may use when attempting to pull the saw free. You may pull the moving chain into yourself

Kickback occurs when the saw tip touches another object or the blade is pinched. The saw is thrown back towards the user. A saw cutting at full throttle can kick back in one tenth of one second – much faster than a person can react.

When cutting, hold the saw firmly with both hands, with thumbs and fingers encircling both chain saw handles. Grip the saw with the right hand on the rear (throttle) handle and the left hand on the front handle, even if you are left-handed. A firm grip will help you maintain control of the saw in the event of a kickback or other unexpected reaction. Keep the chain saw handles dry, clean and free of oil or fuel mixture to avoid slipping and to aid in control of the saw.

Modern chain saws are equipped with a variety of devices intended to reduce the risk of injury from kickback or from other causes. Among these are the chain brake, the front (left) hand guard, the bar tip guard and low or reduced kickback saw chain and guide bars. To assure the protection afforded by these devices is maintained, it is important your chain saw is properly and fully assembled, and that all components are securely attached and functional.

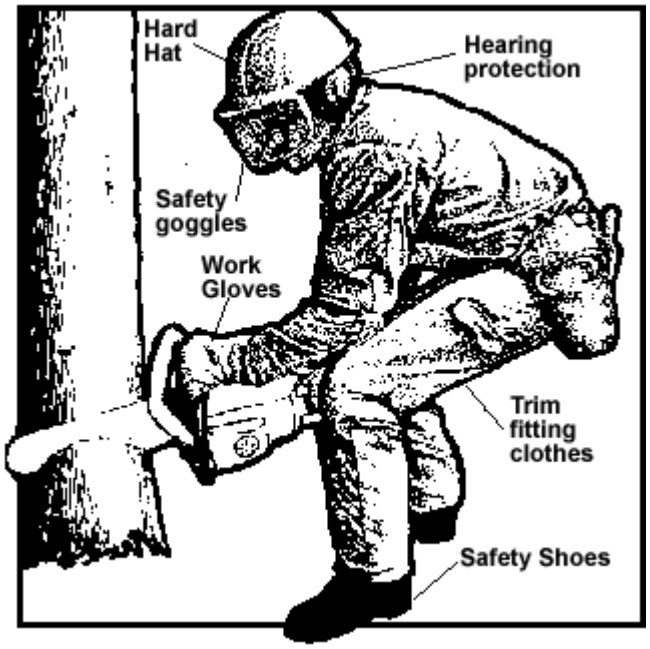

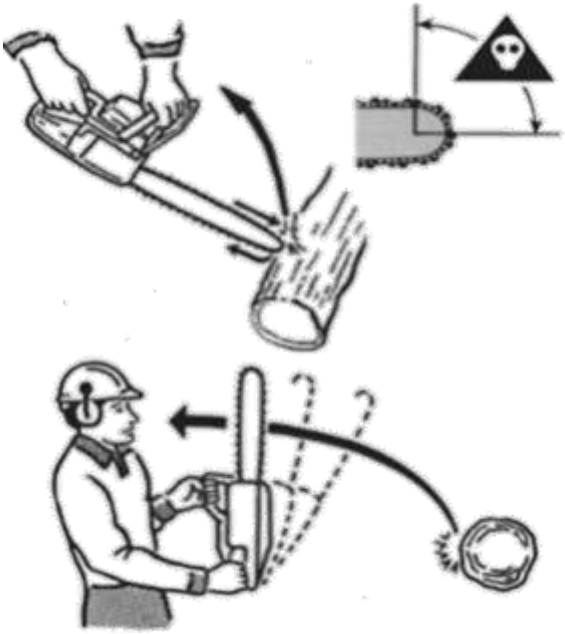

*** Regulatory Reference**
NB OHSA & Reg 91-191, (July 1, 2011) Part IX, Section 86, Part XXI, Section 346 to 352
NS OHSA & Reg S.N.S 1996, c.7, (June 12, 2013) Part 8, Section 90, CSA Z62.1 "Chain Saws", CSA Z62.3 "Chain Saw Kickback"
PE OHSA General Regs EC180/87; 43/06, (Jan, 2013) Part 29, Section All, Part 30, Section All, Part 45, Section All
NL OHSA & Reg 5/12, (Jan 2012) Part VIII, Section 109, CSA Standard Z62.1 "Chain Saws"

The information contained in this publication is intended for general use and may not apply to every circumstance. It is not a definitive guide to government legislation and does not relieve persons using this publication from their responsibilities under the Workplace Safety and Health Act or applicable legislation.
The appropriate regulations and statutes should always be consulted and adhered to. Atlantic Roofers Limited/North Shore Roofing Ltd. and its affiliates do not guarantee the accuracy of, nor assume liability for the information presented here.

General

Protecting employees and general public from injuries associated using a circular saw. This type of power tool is one of the most commonly used in construction. Because of its widespread use, there are numerous accidents due to thoughtless acts.

Hazards Present

- Dust / Noise
- Electrical Shock
- Cuts / Pinch Points

Protective Mechanisms

- Manufacturers Recommendations
- ERP (Emergency Response Plan)
- Safe Work Practices/Procedures
- PPE
- Training

Do

- DO ensure that guards are in place and safety devices are working properly
- DO pull on the plug, not on the cord when unplugging equipment
- DO keep the power cord away from the blade, heat, water and oil
- DO only use extension cords that are in good condition with proper grounding
- DO ensure that the work area is clear of debris
- DO unplug any broken or unsafe equipment, attach a warning tag, take it out of service and advise your supervisor
- DO avoid cutting small pieces of material
- DO ensure there is adequate lighting in the work area
- DO keep your hands/fingers away from the cutting area and moving blade
- DO wear appropriate personal protective equipment such as safety footwear, safety glasses, hearing protection and respiratory protection
- DO Secure and adequately support the material to be cut
- DO ensure the retracting lower blade guard is fully returned and the blade has fully stopped before setting the saw down
- DO disconnect the power cord before adjusting or changing the blade or performing regular maintenance

Do Not

- DO NOT use tape or any other means to bypass the safety interlock
- DO NOT hold or fix the retracting lower guard in the open position
- DO NOT operate any equipment if you feel drowsy or unwell
- DO NOT place your hand under the shoe or guard of the saw
- DO NOT force the saw while cutting material
- DO NOT wear gloves, loose clothing or jewelry or have long loose hair while operating the saw
- DO NOT operate the saw while standing in water
- DO NOT over-reach when cutting material; keep proper footing and balance
- DO NOT carry the saw with your finger on the trigger switch
- DO NOT operate a circular saw over your head
- DO NOT over-tighten the blade locking nut
- DO NOT attempt to remove the saw from material or pull it back while the blade is in motion
- DO NOT use a saw that vibrates or appears unsafe in any way

Supervisor Responsibility

- Supervisors are responsible to facilitate and/or provide proper instruction to their workers on protection requirements and training
- Identify unsafe conditions and apply corrective measures

Employee Responsibility

- Read and follow the manufacturer's instruction manual and warning labels
- Follow safe work practice/procedures
- Wear appropriate personal protective equipment such as safety footwear, safety glasses, hearing protection and respiratory protection

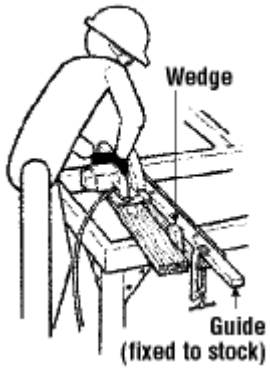

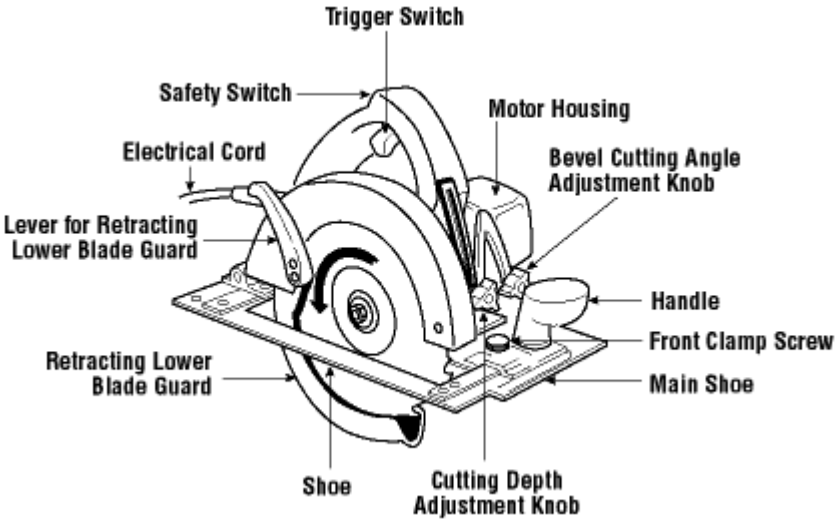

*** Regulatory Reference**
NB OHSA & Reg 91-191, (July 1, 2011) Part IX, Section 80 to 85, Part XVI, Section 235, 239 to 243, 246(4)
NS OHSA & Reg S.N.S 1996, c.7, (June 12, 2013) Part 8, Section 84 to 89, Part 9, Section 104 to 107
PE OHSA General Regs EC180/87; 43/06, (Jan, 2013) Part 29, Section All, Part 30, Section All
NL OHSA & Reg 5/12, (Jan 2012) Part VIII, Section 87 to 95, 98, Part XXIV, Section 471

The information contained in this publication is intended for general use and may not apply to every circumstance. It is not a definitive guide to government legislation and does not relieve persons using this publication from their responsibilities under the Workplace Safety and Health Act or applicable legislation.
The appropriate regulations and statutes should always be consulted and adhered to. Atlantic Roofers Limited/North Shore Roofing Ltd. and its affiliates do not guarantee the accuracy of, nor assume liability for the information presented here.

General

Protecting employees and general public from injuries associated using a circular saw. This type of power tool is one of the most commonly used in construction. Because of its widespread use, there are numerous accidents due to thoughtless acts.

Hazards Present

• Dust / Noise / Vibration	• Electrical Shock	• Cuts / Pinch Points

Protective Mechanisms

• Manufacturers Recommendations • PPE	• ERP (Emergency Response Plan) • Training	• Safe Work Practices/Procedures

Do	**Do Not**
• DO read and follow the manufacturer's instructions and warning labels	• DO NOT wear gloves, loose clothing, jewelry or long loose hair while operating the saw
• DO wear appropriate personal protective equipment such as safety footwear, safety glasses, hearing protection and respiratory protection	• DO NOT place your hands under the material/stock being cut
• DO when unplugging equipment pull on the plug, not on the cord	• DO NOT abuse the power cord. Never use the cord to carry the saw
• DO keep power cords away from the blade, heat, water and oil	• DO NOT carry the saw with your finger on the trigger switch
• DO only use extension cords that are in good condition with proper grounding	• DO NOT use excessive force to push a saw blade into the stock
DO ensure the work area is clear of debris	• DO NOT use a bent or dull saw blade
• DO unplug any broken or unsafe equipment, attach a warning tag, take it out of service and advise your supervisor	• DO NOT insert or withdraw a blade from a cut or lead hole until the motor has stopped
• DO ensure there is adequate lighting in the work area	• DO NOT use a saw if the switch does not turn it on and off
• DO use the saw, tool accessories, blades and battery charger in accordance with the manufacturer's instructions and in the manner intended	• DO NOT operate a corded saw while standing in water
• DO keep the saw's air vents clear to maintain adequate ventilation	• DO NOT operate any equipment if you feel drowsy or unwell

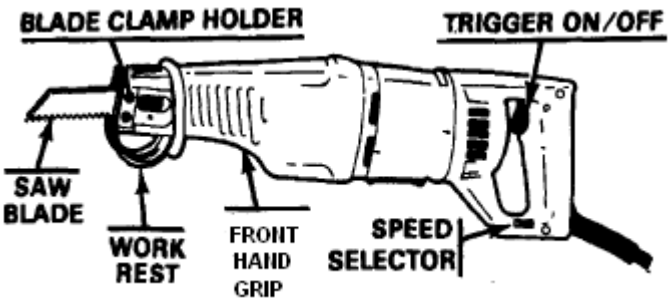

Supervisor Responsibility

- Supervisors are responsible to facilitate and/or provide proper instruction to their workers on protection requirements and training
- Identify unsafe conditions and apply corrective measures

Employee Responsibility

- Read and follow the manufacturer's instruction manual and warning labels
- Follow safe work practice/procedures
- Wear appropriate personal protective equipment such as safety footwear, safety glasses, hearing protection and respiratory protection
- Inspect tool before use and clean tool after use.

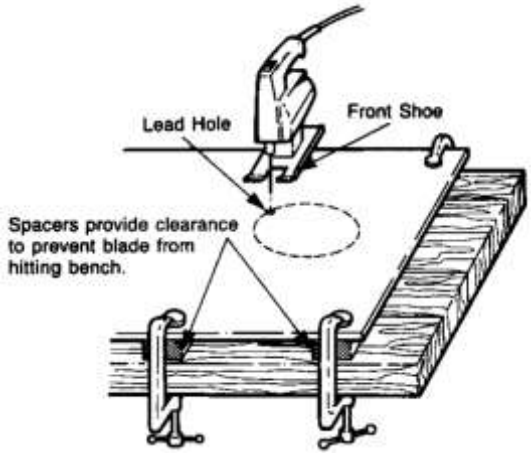

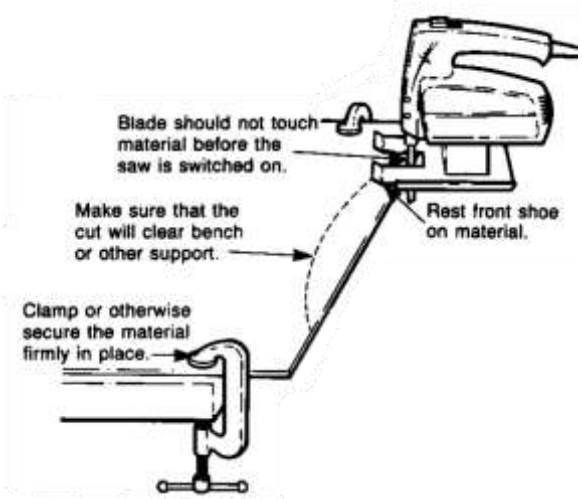

*** Regulatory Reference**
NB OHSA & Reg 91-191, (July 1, 2011) Part IX, Section 80 to 85, Part XVI, Section 235, 239 to 243, 246(4)
NS OHSA & Reg S.N.S 1996, c.7, (June 12, 2013) Part 8, Section 84 to 89, Part 9, Section 104 to 107
PE OHSA General Regs EC180/87; 43/06, (Jan, 2013) Part 29, Section All, Part 30, Section All
NL OHSA & Reg 5/12, (Jan 2012) Part VIII, Section 87 to 95, 98, Part XXIV, Section 471

The information contained in this publication is intended for general use and may not apply to every circumstance. It is not a definitive guide to government legislation and does not relieve persons using this publication from their responsibilities under the Workplace Safety and Health Act or applicable legislation.
The appropriate regulations and statutes should always be consulted and adhered to. Atlantic Roofers Limited/North Shore Roofing Ltd. and its affiliates do not guarantee the accuracy of, nor assume liability for the information presented here.

General

There are various types of metal scaffolds and they all have a right and wrong way to be erected. The misuse of scaffolding is the cause of numerous serious injuries. Every worker who designs or constructs a scaffold should be competent and know what the manufacturer's specifications are for the type of scaffold.

Hazards Present

• Lacerations on Hands	• Fall from Heights (Scaffold Failure)	• Property Damage (Scaffold Failure)
• Back Strain	• Slips/Trips/Falls	• Falling objects

Protective Mechanisms

• ERP (Emergency Response Plan)	• Safe Work Practice/Procedure	• Manufacturers recommendations
• PPE	• Training	• Proper Lifting Techniques

Do	**Do Not**
• DO maintain a safe access to scaffolds and scaffold platforms	• DO NOT climb cross-braces to reach a scaffold platform
• DO use ladders or stairways to reach platforms that are more than 2 feet above or below the access point	• DO NOT use damaged scaffold components. Repair or replace them immediately
• DO make sure a competent person inspects the components before each work shift	• DO NOT modify components
• DO watch for electrical hazards, slippery platforms, and strong winds	• DO NOT mix components made by different manufacturers
• DO have only trained and experienced workers erect suspension scaffolds	• DO NOT roll a scaffold by yourself while you are on it
• DO always wear appropriate fall protection	• DO NOT use damaged wire rope
• DO make sure platforms are guarded to keep workers and equipment from falling	• DO NOT use wood outrigger systems
• DO keep the scaffold level, plumb, and square	• DO NOT drop anything from a scaffold
• DO inspect components, connections, planks, and structures regularly for hazards	• DO NOT use ladders for any reason on a standard scaffold platform
• DO use planking that is sound and meets OSHA requirements	• DO NOT use bricks, blocks, barrels, or other unstable objects to level a scaffold
• DO when a scaffold might be struck by a swinging load, tag lines or equivalent means must be used to control the load	• DO NOT work on slippery platforms
• DO protect suspension ropes from heat and acids or other corrosive substances or use ones made from material that will not be damaged by corrosive substances	• DO NOT use a stage that is too long or too short for the job
• DO stay clear of power lines and any conductive material	• DO NOT use makeshift methods to increase the working height of a scaffold platform

Supervisor Responsibility

- Supervisors are responsible to facilitate and/or provide proper instruction to their workers on protection requirements and training
- Work site inspection
- Selection of equipment

Employee Responsibility

- Ensure load limits for scaffold is not exceeded
- Make sure that scaffolds are inspected before use and that they are not used if defects are found
- Make sure the scaffold you intend to use is the correct one for the job

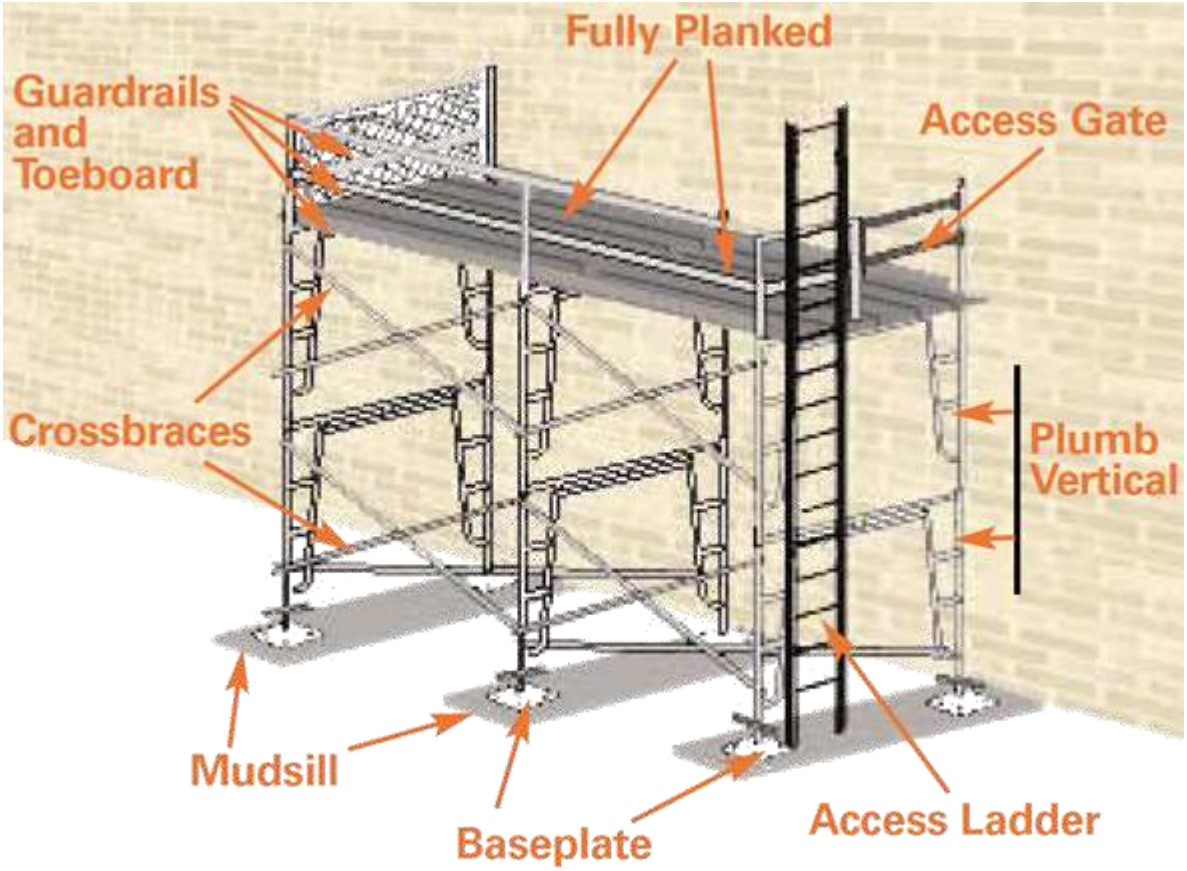

*** Regulatory Reference**
NB OHSA & Reg 91-191, (July 1, 2011) Part XI, Section 131 to 134, 136 to 140
NS OHSA & Reg S.N.S 1996, c.7, (June 12, 2013) Part 13, Section 138 to 140, 142, 146 to 152, 160, 198
PE OHSA General Regs EC180/87; 43/06, (Jan, 2013) Part 5, Section 5.1(s), Part 15, Section 15.2, 15.3, Part 23, Section 23.8(3), Part 27, Section 27.7, 27.13
NL OHSA & Reg 5/12, (Jan 2012) Part XI, Section 147, 154, 157 to 190

The information contained in this publication is intended for general use and may not apply to every circumstance. It is not a definitive guide to government legislation and does not relieve persons using this publication from their responsibilities under the Workplace Safety and Health Act or applicable legislation.
The appropriate regulations and statutes should always be consulted and adhered to. Atlantic Roofers Limited/North Shore Roofing Ltd. and its affiliates do not guarantee the accuracy of, nor assume liability for the information presented here.

General

Protecting workers from injuries associated with spray painting operations. Spray painting is an integral part of construction work, which must be performed by trained workers.

Hazards Present

- Flash Fire / Explosion
- Eye / Skin Irritation
- Inhalation

Protective Mechanisms

- Safe Work Practice/Procedure
- ERP (Emergency Response Plan)
- Manufacturers Specifications
- PPE
- WHMIS / MSDS
- Training

Do

- DO wear the proper Personal Protective Equipment (PPE) such as a hardhat, safety footwear, safety eyewear, hearing protection, and fall protection as required
- DO ensure workers receive WHMIS training and MSDS's (Material Safety Data Sheet) must be on site
- DO use proper manual lifting techniques
- DO clear work area of debris or other tripping hazards before painting. Organize your materials to minimize spills, trips and bump hazards
- DO use drop cloths rather than plastic for spill and splatter control and to minimize risk of slips
- DO read the labels on all paint, thinners, solvents and other controlled products. Refer to MSDS sheets for the safe handling requirements and appropriate personal protective equipment. Give considerable attention to appropriate respiratory and eye protection when spraying

Do Not

- DO NOT leave an airless sprayer resting unattended, whether plugged in or not
- DO NOT do not point spray gun at yourself or other people
- DO NOT use gasoline to clean tools
- DO NOT use equipment that is not grounded
- DO NOT mix paints with other substances without approval
- DO NOT paint near ignition sources such as torches, motors, or heaters
- DO NOT smoke around spray painting operations
- DO NOT use paint in an unventilated area

Supervisor Responsibility

- To facilitate and/or provide proper instruction to their workers on protection requirements and training
- Hazard analysis
- Selection of equipment

Employee Responsibility

- Ensure you follow all safe work practices and procedures
- Ensure you are fully trained

*** Regulatory Reference**

NB OHSA & Reg 91-191, (July 1, 2011) Part VIII, Section 58 to 73
NS OHSA & Reg S.N.S 1996, c.7, (June 12, 2013) Part 1, Section 2(o), Part 5, Section 36 to 44
PE OHSA General Regs EC180/87; 43/06, (Jan, 2013) Part 5, Section 5.1(n), Part 43, Section 43.9 to 43.31, Part 44, Part 45, Section 45.17
NL OHSA & Reg 5/12, (Jan 2012) Part VI, Section 42, Part All, Part XIII, Section 283, Part XVII, Part 398

The information contained in this publication is intended for general use and may not apply to every circumstance. It is not a definitive guide to government legislation and does not relieve persons using this publication from their responsibilities under the Workplace Safety and Health Act or applicable legislation.
The appropriate regulations and statutes should always be consulted and adhered to. Atlantic Roofers Limited/North Shore Roofing Ltd. and its affiliates do not guarantee the accuracy of, nor assume liability for the information presented here.

General

Protecting workers from injuries associated with hazardous energy sources. Lockout and tagging ensures that hazardous energy sources are under the control of each worker. Serious or fatal accidents can occur when people assume that machinery is turned off or made harmless – *but it isn't.*

Hazards Present

- Electrocution
- Burns
- Crushing / Cutting

Protective Mechanisms

- ERP (Emergency Response Plan)
- PPE
- Safe Work Practice/Procedure
- Training
- Manufacturers recommendations

Do

- DO ensure energy sources are locked out and tagged out before maintenance is performed
- DO locate work area and identify equipment, machinery, or other system components to be worked on
- DO identify all energy sources and must be turned off, disconnected, and/or released before maintenance is performed
- DO identify the parts to be locked out or isolated
- DO shut down equipment and machinery, install lockout device, tag device and verify zero energy state
- DO notify all personnel affected
- DO determine lockout methods

Do Not

- DO NOT remove tag unless you are the person who put it there and it is safe to do so
- DO NOT lock out without communicating to other workers. Communicate when work is complete and that all personnel are clear
- DO NOT restart any equipment until guards and safety devices are in place
- DO NOT use another worker's personal lock or tag
- DO NOT have another worker remove your lock or tag

Supervisor Responsibility

- Supervisors are responsible to facilitate and/or provide proper instruction to their workers on protection requirements and training
- Hazard analysis
- Worksite inspection

Employee Responsibility

- Ensure you follow all safe work practices and procedures
- Ensure you are fully trained in procedure
- No person shall remove a lock out device or tag on a machine except the person who installed it, or in an emergency or where attempts made to contact the person who installed it is not available, a competent employee designated by the employer

*** Regulatory Reference**
NB OHSA & Reg 91-191 (Jul 1, 2011) Part XVI, Section 239, 240
NS OHSA & Reg S.N.S 1996, c.7, (Jun 12, 2013) Part 6, Section 51 to 54
PE OHSA General Regs EC180/87; 43/06, (Jan 2013) Part 30, Section 30.6, 30.7, 30.10(3),
NL OHSA & Reg 5/12, (Jan 2012) Part IX, Section 127 to 137

The information contained in this publication is intended for general use and may not apply to every circumstance. It is not a definitive guide to government legislation and does not relieve persons using this publication from their responsibilities under the Workplace Safety and Health Act or applicable legislation.
The appropriate regulations and statutes should always be consulted and adhered to. Atlantic Roofers Limited/North Shore Roofing Ltd. and its affiliates do not guarantee the accuracy of, nor assume liability for the information presented here.

Thermal Exposure - Cold

SWP #51

General

Protecting workers from possible injuries associated with extreme cold exposure. Workers must be aware of dangers associated with working in extreme weather.

Hazards Present

- Hypothermia
- Frostbite
- Frostnip

Protective Mechanisms

- PPE
- Safe Work Practice/Procedure
- First Aid/CPR

Do

DO be aware of the current temperature and wind chill factor. The greater the wind chill factor, the less amount of time should be spent in the cold

- DO periodically check in with the office to ensure safety when working alone or travelling alone
- DO dress appropriate for the weather conditions

DO work in short periods with warm up time between work periods

- DO wear tinted safety eyewear and/or sunglasses with side shields when working in snow/ice covered terrain
- DO wear felt-lined, rubber bottomed, leather-topped boots with removable felt insoles. This is suited for heavy work in cold
- DO wear layered clothing with the inner layer being polyesters or polypropylene to “wick” moisture away
- DO wear a wool knit cap or liner under your hard hat as 50% of body heat is lost through the head
- DO wear special safety goggles if there is a potential for eye hazards from blowing snow or ice crystals

Do Not

- DO NOT consume large quantities of caffeine-containing beverages because they act as diuretics, affecting hydration
- DO NOT work so that you sweat excessively. Pace the work and take proper rest periods
- DO NOT work with wet clothing. Go inside a warm area and change clothing if required
- DO NOT touch cold objects with bare hands
- DO NOT enter cold weather conditions after a recent shower or bath
- DO NOT wear cotton if possible. It tends to get damp or wet quickly losing its insulating properties

Supervisor Responsibility

- Measure and record the thermal conditions at frequent intervals and make available to committee
- Instruct workers in health and safety procedures appropriate to the tasks and environment in which they are to be performed. This should include
  - Proper re-warming procedures and appropriate first aid
  - How to dress for the cold
  - Recognition of frost-nip and frost bite
  - Recognition of the signs and symptoms of impending hypothermia

Employee Responsibility

- Employees shall follow the requirements of this practice and notify their supervisor of any possible exposure concerns or issues

*** Regulatory Reference**
NB OHSA & Reg 91-191 (Jul 1, 2011) Part III, Section 22, 23, Part VII, Section 44
NS OHSA & Reg 53/2013 Made under Section 82, (Jun 12, 2013) Part 2, Section 2.1
PE OHSA General Regs EC180/87; 43/06, (Jan 2013) Part 42, Section 42.1
NL OHSA & Reg 5/12, (Jan 2012) Part VI, Section 44, Part XIV, Section 305

The information contained in this publication is intended for general use and may not apply to every circumstance. It is not a definitive guide to government legislation and does not relieve persons using this publication from their responsibilities under the Workplace Safety and Health Act or applicable legislation.
The appropriate regulations and statutes should always be consulted and adhered to. Atlantic Roofers Limited/North Shore Roofing Ltd. and its affiliates do not guarantee the accuracy of, nor assume liability for the information presented here.

Thermal Exposure - Heat

SWP #52

General

Protecting workers from possible injuries associated with heat exposure. Workers must be aware of dangers associated with working in extreme weather.

Hazards Present

- Heat Stroke/Cramps
- Sunburn
- Organ Damage/Death

Protective Mechanisms

- PPE
- Safe Work Practice
- First Aid/CPR

Do

- DO drink frequently; one cup per hour of cool water, fruit juice, or tea. A drink with sugar should be given once per shift
- DO eat properly to replace the salt lost through perspiration
- DO wear lightweight and light colored clothing. Make sure that you wear the proper protective equipment
- DO wear sunglasses and sunscreen to block out the sun
- DO take regular breaks in a shaded cooler place and shower after each shift
- DO gradually acclimatize yourself to the heat, by increasing your exposure over a period of four to seven days
- DO should avoid exposure to the sun if you have previously suffered from heat stroke you will have increased sensitivity

Do Not

- DO NOT drink alcohol, coffee, or other carbonated drinks with caffeine
- DO NOT overexert yourself
- DO NOT rely on fans to cool people, unless there is adequate ventilation

Supervisor Responsibility

- Instruct workers in health and safety procedures appropriate to the tasks and environment in which they are to be performed.

Employee Responsibility

- Employees shall follow the requirements of this practice and notify their supervisor of any possible exposure concerns or issues

- **Heat Rash** – Red, itchy rash, tingling skin – treat with cool showers, always drying skin and use calamine lotion. Prevent by wearing light cotton clothes and shower often
- **Heat Cramps** – Spasms of the muscles that do the hardest work – drink a glass of water with half a teaspoon of salt, and massage the muscle. Prevent by warming up the muscles before performing heavy work and adding salt to food. Take several rest periods
- **Fainting** – Lie down in a cool place. Prevent by not standing in one place for a long time, stretching often and drinking lots of fluids
- **Heat Exhaustion** – Tired, weak, dizzy, slow pulse – must lie down with knees raised and drink cool fluids. Prevent with sufficient fluids and resting in cool places
- **Heat Stroke** – Hot, dry skin, confused mind, and a high temperature. It can be fatal if treatment is delayed. Get person to hospital immediately, cooling them on the way. Prevent by acclimatizing for four to seven days, resting in cool places, providing sufficient hydration and wearing suitable clothing

*** Regulatory Reference**
NB OHSA & Reg 91-191 (Jul 1, 2011) Part III, Section 22, 23, Part VII, Section 44
NS OHSA & Reg 53/2013 Made under Section 82, (Jun 12, 2013) Part 2, Section 2.1
PE OHSA General Regs EC180/87; 43/06, (Jan 2013) Part 42, Section 42.1
NL OHSA & Reg 5/12, (Jan 2012) Part VI, Section 44, Part XIV, Section 305

The information contained in this publication is intended for general use and may not apply to every circumstance. It is not a definitive guide to government legislation and does not relieve persons using this publication from their responsibilities under the Workplace Safety and Health Act or applicable legislation.
The appropriate regulations and statutes should always be consulted and adhered to. Atlantic Roofers Limited/North Shore Roofing Ltd. and its affiliates do not guarantee the accuracy of, nor assume liability for the information presented here.

Tiger Torch – Safe Handling

SWP #53

General

Protecting workers from injuries associated with the hazards of tiger torches. Although valuable to a job site, they are sometimes misused in a manner that can make them dangerous.

Hazards Present

- Explosion of Tank
- Property Damage
- Burns
- Asphyxiation (Gas Leak)

Protective Mechanisms

- ERP (Emergency Response Plan)
- PPE
- Safe Work Practice/Procedure
- Training
- Manufacturers Specifications
- Fire Extinguisher

Do

- DO have an adequate fire extinguisher present
- DO ensure that propane bottles are properly shut off
- DO make sure fuel lines have regulators
- DO ensure propane bottles are secured in an upright position
- DO make sure tanks are undented, with valve guards, and have been tested/validated, and have safety labels

Do Not

- DO NOT operate if you do not feel comfortable on your own. Have someone with experience assist you
- DO NOT smoke when handling propane fuel equipment

Supervisor Responsibility

- Supervisors are responsible to facilitate and/or provide proper instruction to their workers on protection requirements and training
- Hazard analysis
- Worksite inspection

Employee Responsibility

- Ensure you are conversant with the operation if equipment
- Follow proper procedures for lighting torch
- Ensure fuel lines are in good working conditions
- Ensure proper cylinders are secured and regulators in place
- When not used for pre-heating operation, shut torch off
- Torches are not to be used for heating or thawing of lines where known hydrocarbons are present

*** Regulatory Reference**
NB OHSA & Reg 91-191 (Jul 1, 2011) Part VIII, Section 79
NS OHSA & Reg S.N.S 1996, c.7, (Jun 12, 2013) Part 5, Section 46
PE OHSA General Regs EC180/87; 43/06, (Jan 2013) Part 37, Section 37.11,
NL OHSA & Reg 5/12, (Jan 2012) Part XX, Section 448, Part XXI, Section 450, 453, 454, 457

The information contained in this publication is intended for general use and may not apply to every circumstance. It is not a definitive guide to government legislation and does not relieve persons using this publication from their responsibilities under the Workplace Safety and Health Act or applicable legislation.
The appropriate regulations and statutes should always be consulted and adhered to. Atlantic Roofers Limited/North Shore Roofing Ltd. and its affiliates do not guarantee the accuracy of, nor assume liability for the information presented here.

Tools - Defective

SWP #54

General

Defective tools can cause serious and painful injuries. If a tool is defective in some way, DON"T USE IT. Tools are used commonly in construction. Air, gasoline or electric power tools require skill and complete attention on the part of the user even when they are in good condition.

Hazards Present

- Physical – Noise & Lighting
- Ergonomic – Force, Repetitive Movements, posture
- Chemical - Dust
- Energy - Gravity
- Machine – Moving Parts, sharp blades, Pinch Points

Protective Mechanisms

- PPE
- Safe Work Practice/Procedure
- Manufacturers recommendations
- Tool Maintenance
- Training

Do

- DO Read and follow the manufacturer's instructions and warning labels
- DO know how to safely use hand tools and identify when they need repair
- DO wear PPE appropriate to the task
- DO select the right tool for the job
- DO inspect tools for defects prior to use

Do Not

- DO NOT use broken or unsafe equipment
- DO NOT use tools for jobs they are not intended to do
- DO NOT throw tools
- DO NOT carry sharp tools in your pocket
- DO NOT cut towards yourself when using a cutting tool

Supervisor Responsibility

- Supervisors are responsible to facilitate/or provide proper instruction on PPE and training
- Ensure defective tools are inspected and repaired by a competent person

Employee Responsibility

- Make sure you are familiar with the tool before use
- Ensure all safety protocol is followed
- Avoid distractions and use a clear focused mind
- Double check all tools prior to use
- Don't use power tools when they are defective in any way

*** Regulatory Reference**
NB OHSA & Reg 91-191 (Jul 1, 2011) Part IX, Section 82
NS OHSA & Reg S.N.S 1996, c.7, (Jun 12, 2013) Part 8, Section 84 to 89
PE OHSA General Regs EC180/87; 43/06, (Jan 2013) Part 5, Section 5.1 to 5.3, Part 29 & 30
NL OHSA & Reg 5/12, (Jan 2012) Part 5, Section 26, Part VIII, Section 88 to 104, 111, Part IX, Section 136

The information contained in this publication is intended for general use and may not apply to every circumstance. It is not a definitive guide to government legislation and does not relieve persons using this publication from their responsibilities under the Workplace Safety and Health Act or applicable legislation.
The appropriate regulations and statutes should always be consulted and adhered to. Atlantic Roofers Limited/North Shore Roofing Ltd. and its affiliates do not guarantee the accuracy of, nor assume liability for the information presented here.

General

Protecting workers from injuries associated with the use of power and hand tools. Power tools and hand tools are such a common part of daily life that many people forget about the hazards they pose.

Hazards Present

- Physical – Noise & Lighting
- Energy - Gravity
- Ergonomic – Force, Repetitive Movements, posture
- Machine – Moving Parts, sharp blades, Pinch Points
- Chemical - Dust

Protective Mechanisms

- PPE
- Tool Maintenance
- Safe Work Practice/Procedure
- Training
- Manufacturers recommendations

Do

- DO read and follow the manufacturer's instructions and warning labels
- DO remove all damaged tools from use and tag them, "Do Not Use."
- DO wear PPE appropriate to the task
- DO select the right tool for the job
- DO ensure cords from electric tools don't present a tripping hazard
- DO keep work areas well-lighted and maintain good housekeeping to reduce slips and trips

Do Not

- DO NOT use broken or unsafe equipment
- DO NOT throw tools
- DO NOT use tools for jobs they are not intended to do
- DO NOT carry a tool by the cord or yank the cord to disconnect it from a receptacle
- DO NOT carry sharp tools in your pocket
- DO NOT cut towards yourself when using a cutting tool
- DO NOT remove safety guards or override any safety controls or switches

Supervisor Responsibility

- Supervisors are responsible to facilitate/or provide proper instruction on PPE and training
- Ensure tools are inspected before use

Employee Responsibility

- Make sure you are familiar with the tool before use
- Ensure all safety protocol is followed
- Avoid distractions and use a clear focused mind
- Inspect and double check all tools prior to use
- Don't use power tools when they are defective in any way

*** Regulatory Reference**
NB OHSA & Reg 91-191 (Jul 1, 2011) Part IX, Section 83
NS OHSA & Reg S.N.S 1996, c.7, (Jun 12, 2013) Part 9, Section 104 to 107
PE OHSA General Regs EC180/87; 43/06, (Jan 2013) Part 29, Section All, Part 30, Section All
NL OHSA & Reg 5/12, (Jan 2012) Part V, Section 26, Part VIII, Section 87 to 104, 111

The information contained in this publication is intended for general use and may not apply to every circumstance. It is not a definitive guide to government legislation and does not relieve persons using this publication from their responsibilities under the Workplace Safety and Health Act or applicable legislation.
The appropriate regulations and statutes should always be consulted and adhered to. Atlantic Roofers Limited/North Shore Roofing Ltd. and its affiliates do not guarantee the accuracy of, nor assume liability for the information presented here.

General

Protecting workers from injuries associated with the use of pneumatic tools. Pneumatic tools are powered by compressed air. Common types of these air-powered hand tools are nailing & stapling guns.

Hazards Present

• Physical – Noise & Lighting	• Ergonomic – Force, Repetitive Movements, posture	• Chemical - Dust
• Energy - Gravity	• Moving Parts, sharp blades, Pinch Points	

Protective Mechanisms

• PPE	• Safe Work Practice/Procedure	• Manufacturers recommendations
• Tool Maintenance	• Training	

Do ✓

- DO ensure that the compressed air supplied to the tool is clean and dry. Dust, moisture, and corrosive fumes can damage a tool
- DO keep tools clean and lubricated
- DO use only the attachments that the manufacturer recommends for the tools you are using, inspect the points of breakers for signs of wear and replace as required
- DO prevent hands, feet, or body from injury in case the machine slips or the tool breaks
- DO turn off the air pressure to hose when not in use or when changing power tools
- DO check hoses regularly for cuts, bulges and abrasions. Any found to be defective don't use, report defective airlines to your supervisor
- DO ensure all connections, hose to compressor; hoses to hose and hose to tool are fitted with whip-checks before use
- DO avoid creating trip hazards caused by hoses laid across walkways or curled underfoot
- DO report any and all fuel leaks and spills, use spill kits to clean

Do Not ✗

- DO NOT use airlines that have been used for water they can damage the tool
- DO NOT use damaged lines
- DO NOT change tools with compressed air on (crushing hoses unacceptable)
- DO NOT use compressed air to blow debris or to clean dirt from clothes
- DO NOT carry/handle a pneumatic tool by its hose
- DO NOT T leave compressor running unnecessarily
- DO NOT leave access panels open – Noise and Nuisance issues
- DO NOT use blunt or damaged points on breakers
- DO NOT use tools without whip-checks fitted

Supervisor Responsibility

- Supervisors are responsible to facilitate/or provide proper instruction on PPE and training
- Ensure tools are inspected before use

Employee Responsibility

- Make sure you are familiar with the tool before use
- Ensure all safety protocol is followed
- Avoid distractions and use a clear focused mind
- Inspect and double check all tools prior to use
- Ensure tool is double insulated or bonded to ground
- Don't use power tools when they are defective in any way

Correct use of whip check

Pneumatic type staple gun

Pneumatic type nail gun

*** Regulatory Reference**
NB OHSA & Reg 91-191 (Jul 1, 2011) Part IX, Section 83
NS OHSA & Reg S.N.S 1996, c.7, (Jun 12, 2013) Part 9, Section 104 to 107
PE OHSA General Regs EC180/87; 43/06, (Jan 2013) Part 29, Section All, Part 30, Section All
NL OHSA & Reg 5/12, (Jan 2012) Part V, Section 26, Part VIII, Section 87 to 104, 111

The information contained in this publication is intended for general use and may not apply to every circumstance. It is not a definitive guide to government legislation and does not relieve persons using this publication from their responsibilities under the Workplace Safety and Health Act or applicable legislation.
The appropriate regulations and statutes should always be consulted and adhered to. Atlantic Roofers Limited/North Shore Roofing Ltd. and its affiliates do not guarantee the accuracy of, nor assume liability for the information presented here.

General

Protecting workers from serious injuries, material damages and other losses associated with grinders. Portable grinders are used in construction for various materials. A wheel that shatters can seriously injure the operator and those working nearby.

Hazards Present

- Physical – Noise & Lighting
- Cuts / Abrasions
- Ergonomic – Force, Repetitive Movements, posture
- Chemical - Dust

Protective Mechanisms

- PPE
- Tool Maintenance
- Safe Work Practice/Procedure
- Training
- Manufacturers recommendations

Do

- DO always handle and store wheels carefully. Cut-off wheels should be stacked horizontally and flat. Depressed centre wheels should be placed on top of each other or stored in the original packaging
- DO always visually inspect all wheels before mounting for possible damage in transit
- DO always use a safety guard
- DO always unplug at the source to change the wheel
- DO always ensure that the spindle speed of the machine does not exceed the operating speed marked on the wheel
- DO always secure the workpiece firmly while it is being cut or ground

Do Not

- DO NOT allow the wheel to be trapped or pinched in the cut
- DO NOT apply excessive pressure onto the wheel so that the driving motor slows down
- DO NOT use non-reinforced cutting-off wheels on portable machines
- DO NOT use a damaged wheel
- DO NOT use wheels without proper ventilation or dust protection equipment
- DO NOT tighten the mounting nut or locking flange excessively. To do so can distort the flanges
- DO NOT apply side pressure to cutting-off wheels. You should not bend the wheel

Supervisor Responsibility

- Supervisors are responsible to facilitate/or provide proper instruction on PPE and training
- Schedule regular inspections of grinders

Employee Responsibility

- Wear face shield
- Wear hearing protection, if required
- Never wear loose clothing, ties, rings or other jewellery
- Ensure guard is in place. Tampering with safe guards is prohibited
- Report maintenance problems and defects

*** Regulatory Reference**
NB OHSA & Reg 91-191 (Jul 1, 2011) Part XVI, Section 244
NS OHSA & Reg S.N.S 1996, c.7, (Jun 12, 2013) Part 8, Section 97
PE OHSA General Regs EC180/87; 43/06, (Jan 2013) Part 29, Section 29.8, Part 30, Section 30.11
NL OHSA & Reg 5/12, (Jan 2012) Part V, Section 26, Part VI, Section 68, Part VIII, Section 87 to 95

The information contained in this publication is intended for general use and may not apply to every circumstance. It is not a definitive guide to government legislation and does not relieve persons using this publication from their responsibilities under the Workplace Safety and Health Act or applicable legislation.
The appropriate regulations and statutes should always be consulted and adhered to. Atlantic Roofers Limited/North Shore Roofing Ltd. and its affiliates do not guarantee the accuracy of, nor assume liability for the information presented here.

General

Protecting workers from injuries associated with hazardous materials. All employees will receive WHMIS training as required under current legislation. A record of this training must be maintained.

Hazards Present

- Poison
- Acute/Chronic Health Effects
- Burns
- Biohazard
- Explosion/Fire
- Chemical

Protective Mechanisms

- ERP (Emergency Response Plan)
- PPE
- Safe Work Practice/Procedure
- Training
- Manufacturers Specifications WHMIS Legislation

Do

- DO participate in WHMIS training
- DO inform management about damaged or missing supplier labels
- DO be aware of the location of MSDS and notify management of any invalid or missing MSDS
- DO use PPE and handle controlled products in a safe manner
- DO be familiar with your site's emergency resources and procedures

Do Not

- DO NOT mix different chemical wastes
- DO NOT inhale chemicals or taste any substance
- DO NOT return unused chemicals to their containers

Supervisor Responsibility

- Supervisors are responsible to facilitate and/or provide proper instruction to their workers on protection requirements and training
- Set up and keep an updated MSDS filing system on site
- Request any labels that may be required

Employee Responsibility

- Ensure you have WHMIS training with annual reviews.
- Ensure that there is an MSDS for controlled products used on the site and in the site file which is accessible to all workers
- Ensure proper personal protective equipment is available on site
- Supplier labels must be affixed to the original containers of controlled products
- Workplace labels must be affixed to controlled products that have been transferred from the original container into another container

*** Regulatory Reference**

NB OHSA & Reg 91-191 (Jul 1, 2011) Part VIII, Section 58 to 79 – NB WHMIS Reg 88-221 (Oct 7, 1988)
NS OHSA & Reg S.N.S 1996, c.7, (Jun 12, 2013) Part 5, Section 36 to 42, NS WHMIS Reg. 64/89 (May 9, 1989)
PE OHSA General Regs EC180/87; 43/06, (Jan 2013) Part 11, Section 11.3, Part 43, Section 43.9 to 43.31, Part 45, Section All, PE WHMIS Reg. (1988)
NL OHSA & Reg 5/12, (Jan 2012) Part VII, Section 70 to 86, Part XVII, Section 398, NL WHMIS Reg. (O.C. 96-478)

The information contained in this publication is intended for general use and may not apply to every circumstance. It is not a definitive guide to government legislation and does not relieve persons using this publication from their responsibilities under the Workplace Safety and Health Act or applicable legislation.
The appropriate regulations and statutes should always be consulted and adhered to. Atlantic Roofers Limited/North Shore Roofing Ltd. and its affiliates do not guarantee the accuracy of, nor assume liability for the information presented here.

General

Protecting workers from possible injuries associated with working alone. The circumstances or conditions under which employees are required to work alone or in isolation must be assessed. Control methods/safe job procedures must be developed and implemented to minimize the identified risks

Hazards Present

• Physical	• Chemical	• Biological

Protective Mechanisms

• ERP (Emergency Response Plan) • PPE	• Safe Work Practice/Procedure • WHMIS Legislation	• Manufacturers Specifications • First Aid/CPR

Do

- DO perform a site hazard assessment before starting any work
- DO have access to safe work practices and procedures
- DO use PPE
- DO ensure you are trained in 1st Aid and have 1st aid supplies readily available
- DO always carry an emergency roadside kit and 1st aid supplies when travelling alone
- DO ensure you have a means of regular communication

Do Not

- DO NOT attempt to perform high risk tasks until other workers can assist you
- DO NOT try to be a hero. Retreat from a threatening person or situation

Supervisor Responsibility

- Supervisors are responsible to facilitate and/or provide proper instruction to their workers on protection requirements and training
- Hazard analysis
- Worksite inspection

Employee Responsibility

- Use a second person or buddy system to keep in contact with regularly
- Contact Immediate Supervisor at start and once complete
- Periodic check by another person
- Periodic telephone contact by another person
- Use safe job procedure

*** Regulatory Reference**
NB OHSA & Reg 92-133 (O.C. 92-801) (Sep 28, 1992)
NS OHSA Bill No 18, (Nov 26, 2007)
PE OHSA General Regs EC180/87; 43/06, (Jan 2013) Part 53, Section All
NL OHSA & Reg 5/12, (Jan 2012) Part III, Section 15

The information contained in this publication is intended for general use and may not apply to every circumstance. It is not a definitive guide to government legislation and does not relieve persons using this publication from their responsibilities under the Workplace Safety and Health Act or applicable legislation.
The appropriate regulations and statutes should always be consulted and adhered to. Atlantic Roofers Limited/North Shore Roofing Ltd. and its affiliates do not guarantee the accuracy of, nor assume liability for the information presented here.

Material – Securing

SWP #60

General

Ensuring that materials are secured from movement at the end of each day to prevent theft and property damage due to possible changing weather conditions.

Hazards Present

- Property Damage
- Personal Injury
- Loss of Product

Protective Mechanisms

- Ropes and Straps
- Local, Regional & Federal Regulations
- Safe Work Practice
- Training

Do

- DO check local forecasts
- DO ensure you have enough rope/straps to secure materials
- DO stop work with enough time to secure site
- DO check railing (if in use) to ensure all pins and connections are installed properly

Do Not

- DO NOT leave materials unsecured on roof
- DO NOT leave railing unchecked
- DO NOT leave securing of products until the very last

Supervisor Responsibility

- Supervisors are responsible to ensure that all products are secured from movement during severe weather events
- Enforcement
- Compliance

Employee Responsibility

- When possible bring only required supplies on the roof for the tasks for the day
- Make sure all tools are kept together in a safe place on the roof
- Ensure all garbage is cleaned up stored and secured or removed from roof area
- All unused materials should be piled and secured with ropes and straps from moving to a penthouse or a sturdy roof anchor that will not be damaged
- Place any heavy bundles of product on top of any unused strapped down insulation
- Check all railings installed on site to ensure all pins, clamps, posts, weights are installed and placed properly
- Store any materials if possible inside penthouse area

The information contained in this publication is intended for general use and may not apply to every circumstance. It is not a definitive guide to government legislation and does not relieve persons using this publication from their responsibilities under the Workplace Safety and Health Act or applicable legislation.
The appropriate regulations and statutes should always be consulted and adhered to. Atlantic Roofers Limited/North Shore Roofing Ltd. and its affiliates do not guarantee the accuracy of, nor assume liability for the information presented here.

General

Ensuring that property is protected once hot work has been completed. A fire watch must be conducted for 2 hours upon completion of torching.

Hazards Present

• Property Damage	• Personal Injury	• Loss of Product

Protective Mechanisms

• FLIR Camera • Local, Regional & Federal Regulations	• Safe Work Practice • Training	• Heat Gun

Do

- DO check hot work area for 2 hours post torching
- DO ensure you have fire extinguisher on roof area
- DO use available heat detection devices
- DO check all areas every 15 minutes
- DO ensure that fire extinguishers are charged and up to date with inspections
- DO call 911 when necessary for fire extinguishing

Do Not

- DO NOT leave are without completing fire watch
- DO NOT use hand to detect possible hot spots
- DO NOT leave any combustible materials on the roof area
- DO NOT attempt to put out a large fire on your own

FIRE WATCH REQUIRED FOR 2 HOURS POST TORCH COMPLETION

When is fire watch required?

- A fire watch is required whenever open flame/hot work is performed in a location where a fire might develop or where any of the following conditions exist:
  - Combustible materials on the roof or in the building construction which pose a risk of igniting during torch operations. A pre-work hazard assessment shall include checking the roof and building components for combustible materials and hidden fire hazards.
  - Combustible materials that are more than 15' (4.6m) away but are easily ignited by sparks (dust, fibers, fumes)
  - Wall or roof opening within 15' (4.6m) radius which expose combustible materials in adjacent areas, including concealed spaces or walls or floors
  - Combustible materials that are adjacent to the opposite side of partitions, walls, or roof surfaces and are likely to be ignited
- Atlantic Roofers/North Shore Roofing Ltd. Foreman has the discretion to require a constant fire watch when they feel the circumstances justify having an additional person present. The fire watch shall consist of at least one qualified person

Remember – the Fire Watch Qualified Person must:

- Be trained in the use of fire extinguishers and fire watch procedures including the correct operation of the infrared heat sensor (heat gun or FLIR camera) and completion of the **Fire Watch Record** form
- Remain present and undistracted during Fire Watch
- Be alert for any condition that could lead to a fire
- Ensure appropriate fire fighting equipment is nearby and accessible
- If work is in progress during the fire watch period interrupt the work when a hazardous condition develops, and deal with the situation appropriately.
- Know how to initiate fire emergency procedures, including extinguishing and evacuation of all workers from the Hazard area and notifying all other persons that could potentially be affected, notifying local Fire Department(s), and Atlantic Roofers / North Shore Emergency Contact personnel.

- Remain on the scene for at least two (2) hours after completion of hot work to detect, extinguish, and/or report a fire resulting from stored heat. (Confirm fire watch requirements in job specification. The most stringent application shall apply to the fire watch period)

Fire Watch Checklist

- Check torching equipment, including propane tanks to ensure they are properly all shut off, disconnected and stored properly (make corrections as necessary)
- Check for hot spots around fans and units which may have been turned back on (work in conjunction with building occupants/owner)
- Check for hot spots at penetrations, roof junctions, and control joints.
- Be alert to any unusual odors
- Check for fire at any breaks or openings in the structure.

The information contained in this publication is intended for general use and may not apply to every circumstance. It is not a definitive guide to government legislation and does not relieve persons using this publication from their responsibilities under the Workplace Safety and Health Act or applicable legislation.
The appropriate regulations and statutes should always be consulted and adhered to. Atlantic Roofers Limited/North Shore Roofing Ltd. and its affiliates do not guarantee the accuracy of, nor assume liability for the information presented here.

3.3 Safe Work Practice Proof of Review

Safe	Development			Revised			Reviewed		
Work	Date		By Whom	Date		By Whom	Date		By Whom
Practice	M	Y		M	Y		M	Y	
1	02	05	Br. Mgrs.	04	2018	E Joy	01	19	JHSC
2	02	05	Br. Mgrs.	04	2018	E Joy	01	19	JHSC
3	02	05	Br. Mgrs.	04	2018	E Joy	01	19	JHSC
4	02	05	Br. Mgrs.	04	2018	E Joy	01	19	JHSC
5	02	05	Br. Mgrs.				01	19	JHSC
6	02	05	Br. Mgrs.				01	19	JHSC
7	11	07	Fred. JHS Rep.				01	19	JHSC
8	02	05	Br. Mgrs.				01	19	JHSC
9	02	05	Br. Mgrs.	04	2018	E Joy	01	19	JHSC
10	02	05	Br. Mgrs.				01	19	JHSC
11	01	14	T. Firth				01	19	JHSC
12	02	05	Br. Mgrs.				01	19	JHSC
13	01	14	T. Firth				01	19	JHSC
14	02	05	Br. Mgrs.				01	19	JHSC
15	02	05	Br. Mgrs.				01	19	JHSC
16	01	14	T. Firth				01	19	JHSC
17	11	07	Fred. JHS Rep.				01	19	JHSC
18	01	14	T. Firth				01	19	JHSC
19	11	07	Fred. JSC Rep.	04	2018	E Joy	01	19	JHSC
20	01	14	T. Firth				01	19	JHSC
21	02	05	Br. Mgrs.				01	19	JHSC
22	11	07	Fred. JHS Rep.				01	19	JHSC
23	11	07	Fred. JHS Rep.				01	19	JHSC
24	02	05	Br. Mgrs.				01	19	JHSC
25	01	14	T. Firth				01	19	JHSC
26	04	11	D. Hall				01	19	JHSC
27	04	11	D. Hall				01	19	JHSC
28	04	11	D. Hall				01	19	JHSC
29	01	14	T. Firth				01	19	JHSC
30	01	14	T. Firth	01	2019	E Joy	01	19	JHSC
31	06	09	D.Hall				01	19	JHSC
32	01	14	T. Firth				01	19	JHSC
33	01	14	T. Firth				01	19	JHSC
34	01	14	T. Firth				01	19	JHSC
35	06	09	D. Hall				01	19	JHSC
36	10	06	Coc. JHSC				01	19	JHSC
37	01	14	T. Firth				01	19	JHSC
38	01	14	T. Firth				01	19	JHSC
39	01	14	T. Firth				01	19	JHSC
40	01	14	T. Firth				01	19	JHSC
41	01	14	T. Firth				01	19	JHSC
42	01	14	T. Firth	04	2018	E Joy	01	19	JHSC
43	11	07	Fred. JHS Rep.				01	19	JHSC
44	01	14	T. Firth				01	19	JHSC
45	11	07	D. Hall				01	19	JHSC

Safe	Development			Revised			Reviewed		
Work	Date		By Whom	Date		By Whom	Date		By Whom
Practice	M	Y		M	Y		M	Y	
46	02	05	Br. Mgrs.				01	19	JHSC
47	02	05	Br. Mgrs.				01	19	JHSC
48	04	11	D. Hall				01	19	JHSC
49	06	09	D.Hall				01	19	JHSC
50	01	14	T. Firth				01	19	JHSC
51	02	05	Br. Mgrs.				01	19	JHSC
52	02	05	Br. Mgrs.				01	19	JHSC
53	01	14	T. Firth				01	19	JHSC
54	01	14	T. Firth				01	19	JHSC
55	11	07	Fred. JHS Rep.				01	19	JHSC
56	01	14	T. Firth				01	19	JHSC
57	01	14	T. Firth				01	19	JHSC
58	02	05	Br. Mgrs.				01	19	JHSC
59	02	05	Br. Mgrs.				01	19	JHSC
60	01	18	E. Joy				01	19	JHSC
61	01	18	E.Joy/Br.Mgrs				01	19	JHSC

118 Cocagne Cross Road
Cocagne, NB E4R 2J2
Tel.: (506) 576-6683 Fax: (506) 576-9714

SAFE JOB PROCEDURES

SECTION 4

Section 4

Safe Job Procedures

4.1 Job Procedure Definition…….4.3

4.2 Job Procedure Index……4.5

4.3 Safe Job Procedure Proof of Review…….4.183

118 Cocagne Cross Road
Cocagne, NB E4R 2J2
Tel.: (506) 576-6683 Fax: (506) 576-9714

Job Procedure Definition

Section 4.1

Job Procedure Definition

“Safe Job Procedures” are a control. They provide a step-by-step instruction on how to perform high risk tasks safely. The Occupational Safety General Regulations requires task procedures for certain jobs if they are applicable to your operation, i.e.: Lock Out, Confined Space Entry, Fuelling Equipment with Internal Combustion Engine, etc.

The following pages contain safe job procedures that were developed to address specific company work activities, tools and equipment.

118 Cocagne Cross Road
Cocagne, NB E4R 2J2
Tel.: (506) 576-6683 Fax: (506) 576-9714

Job Procedure Index

Section 4.2

Job Procedure Index

JP#	Job Procedure Name
JP #1	Cleaning with Solvents
JP #2	Dump Chute – Set-up and Use
JP #3	Dump Chute – Cart Use (Power Buggy)
JP #4	Equipment – Blower Use
JP #5	Equipment – Chain Saw Use
JP #6	Equipment – Cut-off Saw Use
JP #7	Equipment – Cutting Machine (Single Blade)
JP #8	Equipment – Powered Gravel Spreader
JP #9	Equipment – RhinoBond Tool Use
JP #10	Equipment – Ripping Machine Use (Roof Remover)
JP #11	Equipment – Sweeper Use
JP #12	Fall Protection – Code of Practice
JP #13	Fall Protection – Fall Arrest System Use
JP #14	Fall Protection – Free Standing Counter Weight Anchor
JP #15	Fall Protection – Pre-Engineered Horizontal Lifeline Use
JP #16	Fall Protection – Railguard 200 Installation
JP #17	Fall Protection – Railguard 200 Use for Travel Restraint
JP #18	Fall Protection – PR-2000 Roofing Platform
JP #19	Fall Protection – PR-600 Mobile Fall Protection System
JP #20	Fall Protection – Safety Monitor / Control Zone Use (NB)
JP #21	Fall Protection – Vertical Lifeline Use
JP #22	Flammable Liquids – Filling / Handling Portable Fuel Containers
JP #23	Flammable Liquids – Propane Handling
JP #24	Hazard Assessment – How To
JP #25	Hoisting – Hand Hoist Set-up and Use
JP #26	Hoisting – Power Hoist Set-up and Use
JP #27	Hoisting – Power Ladder Set-up and Use
JP #28	Hoisting – Rigging
JP #29	Ladders – Extension Ladder Set-up and Use
JP #30	Lock-out / Tag-out
JP #31	Manual Lifting
JP #32	Metal – Fabrication Use Brake
JP #33	Metal – Installing Flashings
JP #34	Mobile Equipment – Boom Lift Operation
JP #35	Mobile Equipment – Forklift Operation
JP #36	Mobile Equipment – Refueling
JP #37	Mobile Equipment – Scissor Lift Operation
JP #38	Planned Inspections
JP #39	Rescue – DBI Rollgliss Rescue Kit for Fallen Worker
JP #40	Respirator – Code of Practice
JP #41	Roof – Cutting Operations
JP #42	Roof – Fiberboard Installation
JP #43	Roof – Insulation and Ballast Installation
	Roof – Loading Pallets of Material on Roof See Section 2 – Form P-02-1 Roof Loading Assessment
JP #44	Roof – Mopping Tar

JP#	Job Procedure Name
JP #45	Roof – Removal and Disposal
JP #46	Roof – Peel and Stick Installation
JP #47	Roof – Hole and Skylight Protection
JP #48	Roof – Torching
JP #49	Roofing Kettle – Set-up of Supply Line
JP #50	Roofing Kettle – Set-up / Use / Shut Down
JP #51	Roofing Kettle – Transfer of Hot Stuff
JP #52	Scaffolds – Metal
JP #53	Working Alone Code of Practice
JP #54	Fall Protection – Safety Monitor / Control Zone (NL)
JP #55	Fall Protection – Rescue Procedures
JP #56	Equipment – Mini Macaden 1000
JP #57	Flammable Liquids – Propane Tank Silicone Rubber Band Heater
JP #58	Fall Protection – Miller Edge Fall Protection System
JP #59	PPE – Adjusting Fall Protection Harness

General

Solvents are among the most commonly used chemicals in workplaces. Workers in different jobs regularly use solvents for degreasing, metal cleaning, and adhesion and as paint thinners or lubricants.

Hazards Present

- Inhalation of Fumes
- Ingestion
- Skin Absorption
- Chemical Burns

Protective Mechanisms

- Protective (rubber) Gloves
- Respiratory Protection
- Protective Clothing/Footwear
- Manufacturers Recommendations
- Safety Face Shield/Goggles
- MSDS/WHMIS Training

Equipment / Tools Required

- Special container for soiled rags
- Hand soap/cleaner
- PPE

Do

- DO check toxic hazards of all solvents before use (MSDS)
- DO make sure containers have suitable WHMIS labels
- DO store flammable solvents in special storage containers
- DO use non-flammable solvents for general cleaning
- DO store flammable solvents in special storage areas
- DO read Material Safety Data Sheet (MSDS) of all solvents before use
- DO provide adequate ventilation where all solvents and flammables are being used
- DO use goggles or face shield to protect face and eyes from splashes or sprays
- DO use rubber gloves to protect the hands
- DO wear protective clothing to prevent contamination of workers' clothes
- DO use the appropriate respiratory protection when breathing hazards exist
- DO ensure that proper containers are used for transportation, storage and field use of solvents/flammables
- DO ensure all WHMIS requirements are met

Do Not

- DO NOT use solvents in areas where food may be contaminated
- DO NOT smoke when using or near solvents
- DO NOT use solvents near open flame or heat
- DO NOT permit hot work in the area when flammable liquids are used
- DO NOT leave solvents in open tubs or vats. Return them to storage drums or tanks

Procedure

1. Inspect work area to make sure that no hot work is being done in the area.
2. Put on all required Personal Protective Equipment (PPE).

Procedure (con't)

3. Spot test a non-visible area by putting a small amount of cleaning solvent on a clean rag. Apply dampened rag to non-visible area to ensure that the cleaning solvent doesn't discolor or otherwise damage the material.
4. If solvent causes any damage or discoloration, stop immediately and advise supervisor.
5. If cleaning solvent does not cause any damage or discoloration, then continue to clean appropriate areas as outlined by supervisor.
6. When finished with cleaning solvent, it must be stored away in proper container and appropriate location. This must be done before going on a break, a meal or at the end of the shift.
7. Ensure you wash thoroughly after putting away goggles, clothing, and gloves to prevent any solvent from being accidentally rubbed on skin or in eyes.

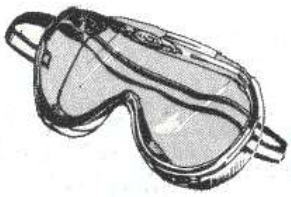

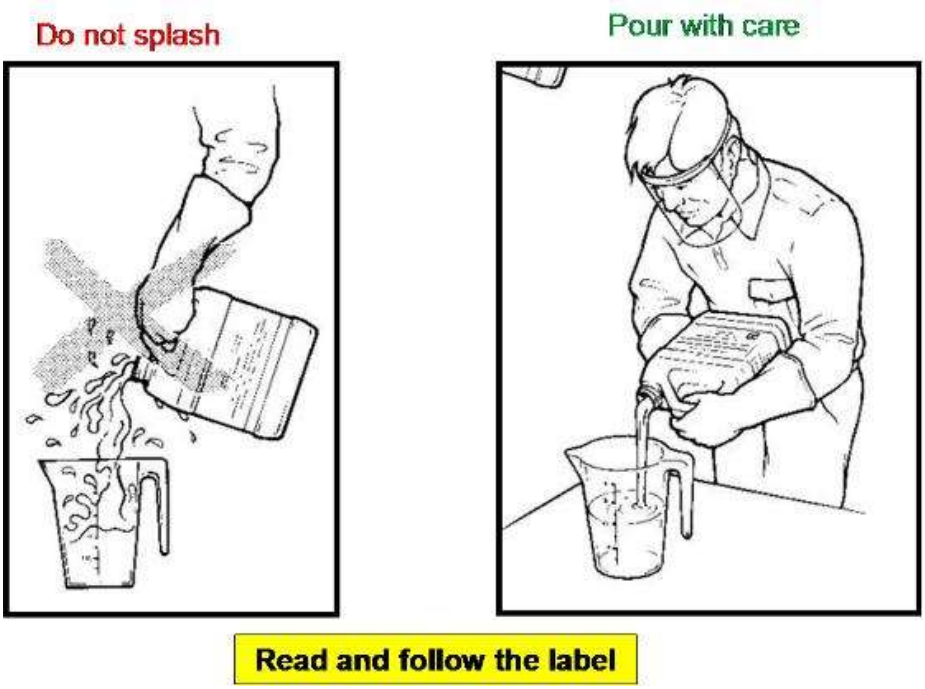

Please contact Safety Coordinator @ 506-576-6683, if you have any questions regarding what is expected for the procedure or for clarification

The information contained in this publication is intended for general use and may not apply to every circumstance. It is not a definitive guide to government legislation and does not relieve persons using this publication from their responsibilities under the Workplace Safety and Health Act or applicable legislation.
The appropriate regulations and statutes should always be consulted and adhered to. Atlantic Roofers Limited/North Shore Roofing Ltd. and its affiliates do not guarantee the accuracy of, nor assume liability for the information presented here.

General

Protecting employees and general public from injuries associated with the use of Dump Chutes. Although these chutes make the work space safer, they still require some extra considerations and proper installation to keep everyone safe when working around them.

Hazards Present

• Inhalation of Harmful Substances	• Fall from Height	• Falling Objects
• Slips/Trips	• Strains/Sprains	

Protective Mechanisms

• Fall Protection	• Rigging	• WHMIS Training
• PPE	• Manufacturers Recommendations	• Barricades/Danger tape

Equipment / Tools Required

• Dump Chute (Specific to Job)	• Adjustable/Open end Wrench	• Outrigger Sections and Counterweights (as required)
• Container/Dumpster/Trailer	• Barricades	• Caution/Danger Tape

Do

- DO ensure this equipment is used by a competent person who has read and understood the job procedure
- DO wear sensible, protective clothing and footwear offering good grip, plus work gloves and a hard hat
- DO tie back long hair and avoid loose garments and jewelry that could get in your way
- DO wear suitable respiratory protection when working with harmful substances
- DO where practicable, the skip should be fitted with a suitable cover (tarp) to keep dust pollution to a minimum
- DO use barricades to cordon off the area under the chute

Do Not

- DO NOT use this equipment if you suffer from a temporary or permanent disability. It's designed to be used by an able-bodies adult
- DO NOT use this equipment if you are ill, feeling tired or under the influence of alcohol or drugs
- DO NOT work directly under the chute

This equipment is designed to be suspended from a secure anchorage point and it is the Workers' responsibility to ensure all necessary precautions have been taken to safeguard any member of the public or any person using the chutes from harm.

Procedure for "VERTICAL" use

1) Conduct a pre-starting inspection of equipment and work area

a) Double check the equipment's general condition before the start of each work day.

b) Pay special attention to all retaining clips and bolts. If it shows signs of excessive wear or damage, *don't use it.* Notify Supervisor so damages/wear & tear it can be rectified/replaced.

c) Make sure you have everything you need on hand, including a team of able bodied workers consisting of

an assembler and one or two helpers to pass up components.

2) Assemble chute sections at ground level (including Dump opening)

a) Remember to always consult manufacturer's instructions.

b) Working on the ground, slide the mouth of each section over the end of the next.

c) Depending on model, either
- fasten its two safety clips to the latter's U-bolts, or
- loop the chain end through the anchorage plate on the side of the chute.

d) Install barricades or run a line of caution/danger tape to define the dumping area.

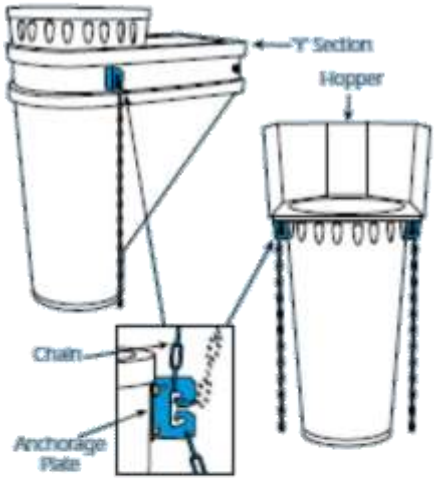

3) Lift Outriggers and Counterweights to the roof level

a) Where applicable, outriggers and counterweights may be used to secure the chute. Set-up is specific to the site and should be determined during the initial site assessment.

b) Follow appropriate hoisting procedures to lift outrigger arms and weights to the roof area.

c) Make sure you use a signaler when hoisting.

d) Signalers and installers on the roof must use the correct fall protection system.

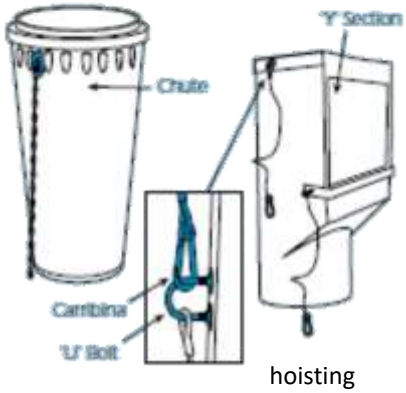

4) Lift Chute Sections

a) Having joined no more than EIGHT sections, tie a rope to the U-bolts/anchorage plate of the section that will form the top of the chute. (dump opening/hopper section will be at the top)

b) Hoist into its working position in a vertical manner. Use appropriate hoisting procedures.

5) Secure Chute

a) Secure the top of the chute at toe board height – 150mm (6 inches) above the working platform – to a suitable fixing point with a wire strap and clip or chain the end plate from the top section. **Ensure the fixing point is capable of withstanding the loads to be placed upon it.**

b) Secure vertical chute along its length every 6 meters (20 feet) by tying to secured scaffolding or other rigid structure.

c) Finally, if you have the hopper as a separate piece, simply drop into the upper chute section. It does not normally need to be secured in any other way. **The hopper must be covered when not in use.**

d) The hopper is designed to allow waste to be tipped into the chute from a wheel barrow, however, guardrails must be installed on each open side of the hopper to prevent any debris that may accidentally miss the hopper falling directly to the ground.

6) Dumping materials

a) Ensure the discharge end of the chute is placed into a closed container or an area that is not accessible to the public. See correct procedures for Dump Cart.

b) The exit point into the skip (Dump Cart) should be moved at regular intervals from one side of the skip to the other. This will spread the waste evenly across the skip and prevent a blockage in the final section.

c) Redistribute its contents from time to time to stop the end of the chute becoming blocked.

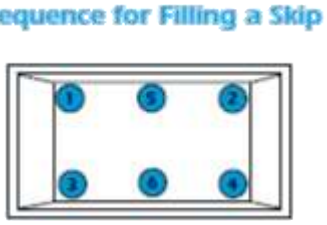

6) Dumping Materials (con't)

d) If climbing into a container use proper hand/foot holds, maintain 3 point contact. Use caution when walking in container.

e) Do not enter the area unless the chute is blocked off or a spotter on the roof is employed to relay communications between roof and ground workers.

f) Wear all applicable PPE including dust masks.

g) Use proper body Mechanics when lifting & carrying to prevent injury.

7) If a Blockage Occurs

a) Stop putting debris into the chute.

b) Evacuate the area below the chute of people. Consider that the path of destruction created by a collapsing chute could be equivalent to its height.

c) Use a crane or hoist with ample capacity to lower the entire chute to the ground.

d) Separate the chute sections on the ground.

e) Remove the blockage.

f) Consult the manufacturer to determine if the anchors and cable assemblies were strained. If yes, order new cable assemblies or rig new anchors. If they were not strained, reinstall the chute system.

8) Installing a Ramp to Access Hopper with a Wheelbarrow

a) All ramps shall be constructed, braced and supported to resist lateral displacement and all vertical loads, including impact and shall not be more than 8 feet in length. (8 feet will allow 50 psf)

b) All lumber shall be at least equal in strength to construction grade lumber.

c) Measure the distance from the top of the parapet to the roof surface. For every one inch of height you will need at least 4 inches of length. (eg; vertical distance of 2 feet, ramp will be 8 feet long).

d) The ramp width will be at least 3 feet in clear width and will consist of 2 inch planking, laid close, butt-joined and securely fastened.

e) Ramp shall be provided with a guardrail and toeboard on open sides.

f) Top rail shall be a 2 inch by 4 inch wood top rail and not less than 3 feet and not more than 3 feet 6 inches above the ramp floor. Mid rail shall be 1 inch by 4 inch wood located midway between the top rail and ramp floor. Both rails shall be supported by 2 inch by 4 inch wood posts spaced not more than 8 feet apart.

g) Toeboard shall be at least 5 ½ inches high and be constructed of metal, wood or other substantial material and be installed along the edge of the ramp. It shall be securely fastened to the posts and installed so there is no open space between the ramp floor and the toeboard.

<u>Procedure for "NON-VERTICAL" use</u>

9) In general, rubbish chutes are best set up as near vertical as possible. However, if necessary they can be angled downward in order to discharge into a skip some way from the foot of the scaffolding or building.

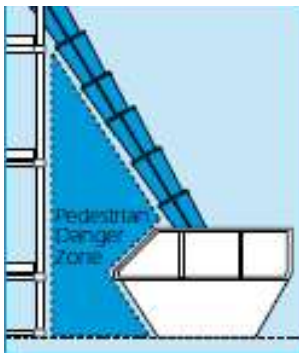

a) Construct the chute as described in steps 1 to 5.

b) Make sure the top of the chute is securely fastened before pulling bottom tight.

c) Secure the bottom end to the skip with a rope fed through the U-Bolts or anchorage plates of the lowest section and tied off on the skip's lugs.

d) Before tying off, though, pull the rope as taught as possible to stop the chute sagging.

e) If you cannot stop it sagging more than a small amount, then you must shorten it and move the skip to suit.

f) If the chute sags, it will certainly clog with rubbish and could break in two

8) Finishing Off

a) To dismantle the chute, merely reverse the erection procedure explained in Steps 1 to 5.

b) Note, however, that if the chute has been set up at an angle to span some obstacle and is to be out of action for only a short period (say, overnight) there is no need to take it down completely.

c) Instead, merely dismantle the lower sections, so the chute can be swung back and tied off vertically against the side of the scaffold or building. Then block off all hoppers fitted to prevent its use.

d) It is rarely necessary to dismantle the chute in order to direct it into a different skip. Simply untie the ropes holding the sections in place and swing it over into the new position – you'll find the chute is really quite flexible.

e) Similarly, the top end can just be swung into the new position if you wish to relocate the hopper. Only if a fairly large movement is required will there be any need to dismantle the chute and start again.

9) Equipment Care

a) Never push the equipment beyond its design limits. If it will not do what you want with reasonable ease, assume you have the wrong tool for the job. Ask for assistance.

b) Keep the chute clean. You will find this less of chore if you hose it down regularly rather than wait until the end of the hire period.

c) When not in use, store the chute sections somewhere safe from thieves; keeping them upright at all times to prevent deformation.

d) Remember that the chute is designed to transport ordinary building site rubbish. It is not designed to cope with liquid or semi liquid waste, corrosive, flammable, hot or hazardous materials.

e) The chute is not designed to cope with large, long, heavy objects. These will almost certainly block up the chute, and could actually break out through it, causing serious damage or personal injury.

Trash Hopper Counterweight System

Window/Parapet Outrigger

Please contact Safety Coordinator @ 506-576-6683, if you have any questions regarding what is expected for the procedure or for clarification

The information contained in this publication is intended for general use and may not apply to every circumstance. It is not a definitive guide to government legislation and does not relieve persons using this publication from their responsibilities under the Workplace Safety and Health Act or applicable legislation.
The appropriate regulations and statutes should always be consulted and adhered to. Atlantic Roofers Limited/North Shore Roofing Ltd. and its affiliates do not guarantee the accuracy of, nor assume liability for the information presented here.

General

Protecting employees and general public from injuries associated with the use of Dump Carts (Power Buggies).

Hazards Present

• Inhalation of Harmful Substances	• Fall from Height	• Falling Objects
• Slips/Trips	• Strains/Sprains	• Fire/Explosion

Protective Mechanisms

• Fall Protection	• Manufacturers Recommendations	• WHMIS Training
• PPE	• Fire Extinguisher	

Equipment / Tools Required

• Dump Cart	• Fuel (Gas)	• Hoist

Do

- DO ensure this equipment is used by a competent person who has read and understood the job procedure
- DO wear sensible, protective clothing and footwear offering good grip, plus work gloves and a hard hat
- DO always clean up any spills immediately
- DO ensure all guards are properly installed
- DO avoid excessive bending. Sweep smaller debris into piles and shovel into cart
- DO wear boots with good traction, safety eyewear and dust mask if required

Do Not

- DO NOT leave motorized equipment running while unattended
- DO NOT use this equipment if you are ill, feeling tired or under the influence of alcohol or drugs
- DO NOT store fuel on or close to a hot engine
- DO NOT smoke in refueling areas
- DO NOT wear loose clothing, jewelry or objects that may become entangled in moving parts
- DO NOT overload the cart

Procedure

1) **Conduct a pre-starting inspection of equipment and work area**
   a) Double check the equipment's general condition before the start of each work day.
   b) Make sure you read and understand the manufacturer's instructions and job procedures.
   c) Check the gas & oil levels and refill as necessary. Always clean up spills immediately.

2) **Check Load Limits and Capacities**
   a) Check roof load limits and capacities with builder, owner, architect or on site engineer.

Loaded Weights(Approximate)

Combination	**Weight**
Power Unit with Dump Hopper or Forks	525 lbs plus load

Capacities

Combination	**Capacity**
Dump Hopper or Forks	1000 lbs

* Check with your material sources for the actual weight of the material that you are using.

Procedure (con't)

3) Hoist the Machine to the Roof

a) Inspect the hoist.
b) Make sure everyone on the ground is completely clear of the hoisting area.
c) Consult your "Hoisting" Job Procedure for complete hoisting procedures.
d) Connect hooks from the hoist line to rings provided on side of Cart. Hoist using these rings only.
e) Approximate Machine & Attachment Weights

Power Unit	340 lbs	55Gal Insulated Tank	75 lbs
Dump Bucket (Standard)	60 lbs	Rods & Channels for tank	25 lbs
Dump Bucket (Large)	120 lbs	Material Forks	55 lbs
Gravel Spreader	150 lbs		

4) Start Motor

a) Remove any objects that could injure hands or arm when pulling start cord.
b) Do not wear loose clothing, jewelry or objects that may become entangled in moving parts.
c) Ensure all guards are properly installed.
d) Pull cord to start machine.

Figure 1

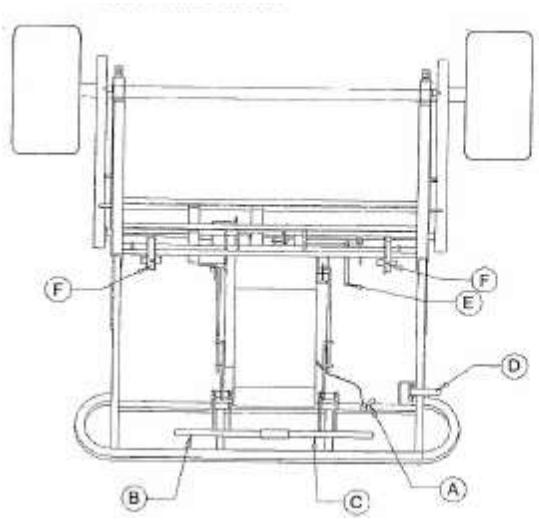

A – Throttle Control
B – Clutch Handle
C – Brake Handle
D – Gravel Bucket Handle
E – Dump Bucket Release Handle
F – Gravel Spreader Swivel Lock

To move the power unit, powered, push down on Clutch Handle, B.

To push the power unit forward, unpowered, push down on the Brake Handle, C.

The speed is controlled by the Throttle Lever, A. The higher the engine RPM, the faster the machine will travel.

5) Move Cart to Debris Area

a) Ensure a clear pathway. Move obstacles or people as necessary.
b) If obstacles cannot be moved find an alternative route to the debris.
c) Proceed to use cart maneuvering controls to carefully move cart to debris area.

6) Load Dump Cart

a) Place, do not throw, large / heavy objects in cart.
b) Avoid excessive bending. Sweep smaller debris into piles and shovel into cart.
c) Never overload the cart. Debris may fall off and cause trip hazards.

***Procedure* (con't)**

7) Move Cart to Dump Chute

a) Look behind you before reversing direction.
b) Ensure a clear pathway exists.
c) Move slowly and steadily when backing up. Walking backwards creates an additional trip/fall hazard.

8) Drive Cart up Ramp to Dump Chute

a) Ensure ramp is clear of mud, ice, water or any substance that will reduce traction.
b) Make sure there is a wheel stop in place at the end of the ramp that is capable of holding the load.
c) Wear work boots with good traction.
d) Proceed up ramp with cart.

9) Dump Load

a) Make sure there are no workers in the dump zone below.
b) Wear safety eyewear when dumping to protect eyes.
c) Position tire against the stop and lift up on the handles to dump.
d) Keep a firm grip on both handles to avoid the load tipping to the side and causing muscle strain.
e) Off load large pieces by hand.

10) Backing Up

a) *Never back up within 10 feet of an edge.* (or 8 feet of operating parallel to the roof)
b) Always look behind before reversing direction.
c) Walking backwards creates an additional trip hazard, proceed backward slowly.

11) Return to Step 1 and Repeat OR

12) Secure Equipment at End of Shift

a) Make sure equipment is in a safe, secure location and all locks are in place, fuel is shut off, etc.

13) Maintenance

a) Disconnect spark plug wire before working on machine
b) Lubrication recommendations are as follows:
   i) Grease roller bearings in wheel hubs as well as pillow block bearings on brake and differential shaft weekly, or more often as needed.
   ii) All moving parts in the control linkage as well as the chains should be kept well oiled to prevent rust and encourage free movement.
   iii) All moving parts should be checked regularily for debris buildup and if it occurs should be cleaned with a wire brush.
c) Check condition of hydraulic oil frequently. If the oil begins to look black or dirty change immediately.

REFERENCES:
Form F-07-5 General Roofing Powered Equipment Daily Pre-use Inspection

Please contact Safety Coordinator @ 506-576-6683, if you have any questions regarding what is expected for the procedure or for clarification

The information contained in this publication is intended for general use and may not apply to every circumstance. It is not a definitive guide to government legislation and does not relieve persons using this publication from their responsibilities under the Workplace Safety and Health Act or applicable legislation.
The appropriate regulations and statutes should always be consulted and adhered to. Atlantic Roofers Limited/North Shore Roofing Ltd. and its affiliates do not guarantee the accuracy of, nor assume liability for the information presented here.

General

Protecting employees and general public from injuries associated with the use of Blowers.

Hazards Present

• Inhalation of Harmful Substances	• Fall from Height	• Falling Objects
• Slips/Trips	• Strains/Sprains	• Fire/Explosion

Protective Mechanisms

• Fall Protection	• Manufacturers Recommendations	• WHMIS Training
• PPE	• Fire Extinguisher	• First Aid Training

Equipment / Tools Required

• Blower	• Fuel (Gas)

Do ✓

- DO ensure this equipment is used by a competent person who has read and understood the job procedure
- DO wear sensible, protective clothing and footwear offering good grip, plus work gloves, hard hat, safety glasses, hearing protection and dust mask
- DO always clean up any fuel spills immediately
- DO ensure all guards are properly installed
- DO always ensure a clear pathway. Move obstacles or people as necessary
- DO avoid excessive bending

Do Not ✗

- DO NOT leave motorized equipment running while unattended
- DO NOT use this equipment if you are ill, feeling tired or under the influence of alcohol or drugs
- DO NOT store fuel on or close to a hot engine
- DO NOT smoke in refueling areas
- DO NOT wear loose clothing, jewelry or objects that may become entangled in moving parts
- DO NOT back up within 8 feet of an edge

Procedure

1) Conduct a pre-starting inspection

a) Inspect equipment for damages and defects. If defects are found, do not use and notify your supervisor to arrange for repairs.

b) Tighten any loose clamps to manufacturer's specifications.

c) Check the security of the throttle lever. Should be smooth and easy action. The throttle lever lock should function properly.

d) Check for clean and dry handles and test the function of the I-O switch. Keep handles free of oil and fuel.

e) Check the oil and gas levels and refill as necessary.

f) Never refuel a hot engine.

g) Inspect the fuel cap making sure it stays securely fastened.

h) Inspect the work area for obstacles and people. Move as necessary.

i) Never operate the machine with a faulty exhaust.

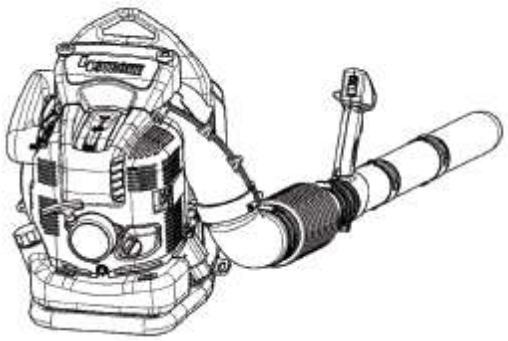

Procedure **(con't)**

2) Start Motor

a) Make sure there are no other people within a working range of 15 meters (50 feet).
b) Ensure proper guards are in place and accessories are attached.
c) Do not wear loose clothing or objects that could become entangled. Wear long sleeves and work gloves to avoid burns from contact with hot motor.
d) Remove objects that could injure hand or arm when pulling start cord.
e) Pull cord to start motor taking care not to overstrain arm and back muscles.

3) Operation

a) All protective parts and guards supplied with the machine must be used during operation.
b) Choose the location of the work area you will blow towards.
c) Make sure there are no workers in that area and no openings, doorways, vents, etc. that debris could be blown into.
d) Always wrap your fingers tightly around the handle, keeping the control handle cradled between your thumb and forefinger.
e) Always operate the blower in a well-ventilated area and in such a manner as to avoid inhalation of exhaust gases.

4) Shut down

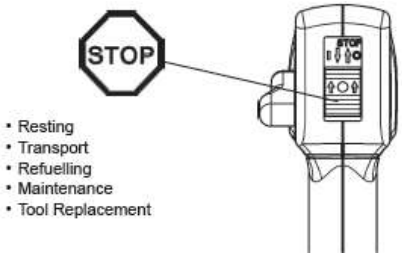

a) Switch off the engine when resting or leaving the blower unattended.
b) Place in a safe location to avoid danger to others, setting fire to combustible materials or damage to the machine.
c) Shut off the engine during transport and position safely in vehicle to avoid fuel leakage. Make sure the fuel tank is completely empty when transporting.

5) Refueling

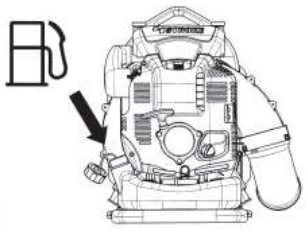

a) Shut off engine, keep away from open flame and do not smoke.
b) Engine must be allowed to cool for at least 2 minutes before refueling.
c) Take care not to spill fuel or oil to prevent soil contamination.
d) Clean blower immediately if fuel is spilled. Change clothes immediately and allow wet clothes to dry before disposing to prevent spontaneous combustion.
e) Carefully tighten the locking screw of the fuel tank. Only start the machine 3 meters (10 feet) away from where it was refueled.
f) Never refuel in closed rooms. Fuel vapors will accumulate at ground level causing a risk of explosion.
g) Only transport fuel in approved containers.
h) Do not attempt to refuel a hot or a running engine.

Please contact Safety Coordinator @ 506-576-6683, if you have any questions regarding what is expected for the procedure or for clarification

The information contained in this publication is intended for general use and may not apply to every circumstance. It is not a definitive guide to government legislation and does not relieve persons using this publication from their responsibilities under the Workplace Safety and Health Act or applicable legislation.
The appropriate regulations and statutes should always be consulted and adhered to. Atlantic Roofers Limited/North Shore Roofing Ltd. and its affiliates do not guarantee the accuracy of, nor assume liability for the information presented here.

General

Protecting employees and general public from injuries associated with the use of Chainsaws. The chain at full throttle can reach speeds of 45 MPH, it is important that you read & understand as well as observe the following safety precautions.

Hazards Present

• Kickback	• Cuts	• Noise
• Dust	• Flammable liquids	• Flying Debris

Protective Mechanisms

• PPE	• Manufacturers Recommendations	• Safe Work Practice/Procedure
• Fire Extinguisher	• 1st Aid	• Training

Equipment / Tools Required

• Chainsaw	• Fuel (Gas)

Do

- DO have supervisors' approval before operating a chainsaw
- DO comply with all OHS Regulations
- DO be familiar with Operation Manual and Safe Work Practice/Job Procedure
- DO inspect before each use
- DO tag out and have repaired if any parts are broken or missing

Do Not

- DO NOT operate a chainsaw by yourself. Always have at least 2 people on site
- DO NOT operate a chainsaw if you are not feeling physically and mentally competent to safely complete the task
- DO NOT use the saw if there is any damage or missing parts
- DO NOT cut anything above shoulder height

Procedure

1) **Pre Set-up (Before Operating the Saw)**
   a) Inspect to make sure all safety controls are intact.
   b) Trigger lock, chain catcher and chain brake should be in working order.
   c) Never use saw if any parts are broken or missing.
   d) Tag out saw and have repaired if found broken.
   e) Check weather conditions – don't go out in extreme weather conditions.
   f) Check for fluids (gas, oil) ***never refuel a hot saw***, wait for it to cool down first.
   g) Check for appropriate file, file guide, wedges, axe, 1st aid kit.
   h) Make sure saw is filed correctly (use file guide).
   i) Make sure saw is running correctly.
   j) Make sure you have appropriate signage.

2) **Starting the Saw**
   a) Make sure saw is fuelled.
   b) Turn on saw put choke on.

Procedure (con't)

2) Starting the Saw (con't)

c) Always use a three point start when starting a cold saw (left hand on handle, knee on saw, pull with right hand.

d) Once saw turns over remove choke and pull again.

e) Test chain brake by running saw at ¾ throttle, and activate the chain brake with back of hand.

f) When walking with saw have chain brake on or turn saw off, as well as saw facing backwards as you walk.

3) Cutting Instructions

a) Grip:
   i) Always hold saw with a firm grip using both hands when the engine is running.
   ii) Place your right hand on the rear handle and throttle trigger, your left hand on the front handle bar, left hander should follow these instructions as well.
   iii) Wrap your fingers and thumb around the handles. With your hands in this position, you can best oppose and absorb the push, pull and kickback forces of your saw without losing control.

4) Post Procedure / Take Down

a) Clean up:
   i) Remove side plate and clean out any debris that may interfere with the chain.
   ii) Clean air filter (blow it out or use soap and water) never use mix gas.
   iii) Make sure safety controls are working (chain catcher, trigger lock, chain brake).
   iv) Sharpen saw or take it to be sharpened by a professional.
   v) Refuel saw. Chainsaw must be allowed to cool for at least 2 minutes before refueling.

5) Things to look out for when using a chainsaw

- Overhead hazards
- Good escape route
- Buck to the high side so the log will not roll towards you
- Check for pivot points
- Make sure you identify the correct binds
- If you can't identify the bind always cut bottom first
- Never cut anything above shoulder height
- In the event of an emergency, turn off saw first and then take appropriate measures

Please contact Safety Coordinator @ 506-576-6683, if you have any questions regarding what is expected for the procedure or for clarification

The information contained in this publication is intended for general use and may not apply to every circumstance. It is not a definitive guide to government legislation and does not relieve persons using this publication from their responsibilities under the Workplace Safety and Health Act or applicable legislation.
The appropriate regulations and statutes should always be consulted and adhered to. Atlantic Roofers Limited/North Shore Roofing Ltd. and its affiliates do not guarantee the accuracy of, nor assume liability for the information presented here.

General

The cut-off saw is a high-speed, fast-cutting power tool so special safety precautions must be observed to reduce the risk of personal injury and fire. It is important to fully understand and observe the safety precautions and procedures below.

Hazards Present

• Explosive Disk	• Cuts	• Noise
• Dust	• Burns and Heat	• Flying Debris

Protective Mechanisms

• PPE	• Manufacturers Recommendations	• Safe Work Practice/Procedure
• Fire Extinguisher	• Equipment Training	

Equipment / Tools Required

• Cut-off Saw	• Fuel	• Manufacturer's Manual

Do ✓

- DO have supervisors' approval before operating a cut-off saw
- DO make sure the saw is in good working order before you use it
- DO ensure it is *"unplugged"* before changing the blade
- DO keep work area clean
- DO consult manufacturer's instructions for correct saw blade size and RPM
- DO only cut asphalt, concrete, stone, brick, and plastics
- DO inspect the Saw Blade frequently, and replace immediately if the Blade is cracked, or warped. Cracked or warped Saw Blades may shatter or break and cause serious personal injury
- DO keep hands and fingers away from the cutting area and Saw Blade
- DO allow the Saw Blade to spin up to full speed before feeding it into a workpiece
- DO when cutting a large workpiece, make sure it's entire length is properly supported

Do Not ✗

- DO NOT wear loose clothing, jewelry or objects that may become entangled in moving parts
- DO NOT operate a chainsaw if you are not feeling physically and mentally competent to safely complete the task
- DO NOT use the saw if there is any damage or missing parts
- DO NOT operate without training
- DO NOT use carbide-tipped, woodcutting, or circular machine Saw Blades. They can cause severe personal injury from reactive forces, blade contact, or thrown objects
- DO NOT attempt to cut more than one workpiece at a time
- DO NOT attempt to remove material stuck in the cut-off saw while it is operating
- DO NOT force the Saw Blade into the workpiece when cutting. Apply moderate pressure, allowing the Saw Blade to cut without being forced

Procedure

1) **Pre Set-up (Before Operating the Saw)**
   a) Inspect to make sure all safety controls are intact and there is no damage or missing parts.
   b) Consult manufacturer's instructions for proper fuel mix. Never run the Engine with an improper fuel mix, low or no fuel mix. This will permanently damage the unit.
   c) Mix only enough fuel for a few work days. The maximum storage time of mixed fuel is 3 months.

***Procedure* (con't)**

2) To Install a Saw Blade

a) To avoid accidental injury, always wear heavy duty work gloves when changing the saw blade.

b) Allow the Saw Blade to completely cool before handling. The Saw Blade will become hot while cutting.

c) Press down on the Shaft Lock to hold the Blade Shaft in position.

d) Loosen and remove the Hex Bolt. Then, remove the Washer and outer Flange.

e) Mount the new Saw Blade on the Blade Shaft. IMPORTANT: Make sure the arrow shown on the Saw Blade points in the same direction as the arrow shown on the Blade Guard.

f) Once the Saw Blade is mounted on the Blade Shaft, replace the outer Flange and Washer. Then, firmly tighten the Hex Bolt to secure the Saw Blade in place.

g) Make sure to check the Blade Guard for proper operation. If necessary, loosen the Blade Guard Positioning Knob to adjust the Blade Guard position. Never disable the Guard.

h) Do not use the Cut Off Saw if the Guard assembly does not operate properly. Before each use, make sure the Blade Guard does not touch the Saw Blade.

3) Starting the Cut-off Saw

a) Wear approved safety impact goggles, hearing protection, and dust mask/respirator during use.

b) Place the Cut Off Saw on flat, level ground, so that the Saw Blade does not contact any objects or the ground. Orient the saw away from your body.

c) Pull the Throttle Trigger all the way back, press down on the Full Throttle Lock Button and Release the Throttle Trigger.

d) Press down on the Decompression Valve and turn the Kill Switch out of the off position.

e) Set the Choke Lever to the appropriate position. (If the engine is cold or warm)

f) Hold the Front Handle with your left hand, and place your right foot on the rear section of the Main Housing. Place your foot only on the flat portion of the Main Housing, otherwise the unit could become unstable or components could be damaged. Firmly press the Cut Off Saw to the ground.

g) Hold the Starter Grip securely, and maintain balance while slowly pulling out the Starter Rope for a short distance. Then, pull out the Starter Rope quickly about 2-1/2". After pulling, bring Starter Grip slowly to the housing before releasing it.

h) If the Engine does not start, press the Decompression Valve again and attempt to start the Engine. It may take repeated attempts (8-16 tries) to start the engine.

i) If the Engine runs for a while but then stops, press the Decompression Valve. Move the Choke Lever "warm" to and restart the Engine.

j) As soon as the Engine starts, squeeze the Throttle Trigger briefly and let up. The Full Throttle Lock Button will revert to its original position, causing the Engine to idle.

k) NOTE: If the Engine is new, or has been stored for a long period of time, pull the Starter Grip several times to ensure sufficient fuel is delivered into the fuel line and combustion chamber of the Engine.

4) Stopping the Cut-off Saw

a) Allow the Engine to idle. Then, press and hold the Kill Switch located at the front of the Rear Handle.

b) When storing the Saw, make sure to store the unit in a clean, dry, safe location out of reach of children and other unauthorized people. For long periods of storage, drain and clean the Fuel Tank.

***Procedure* (con't)**

5) Operating the Cut-off Saw

a) NOTE: During the break-in phase, which takes about eight hours of use, the Cut Off Saw must not be operated at high speeds without a load (do not pull the Throttle Trigger beyond 3/4 of full throttle). Following this procedure will lengthen the service life of the Saw. After running the Cut Off Saw for an extended period of time, allow the Engine to idle for several minutes to dissipate the heat. This will prevent some engine parts (ignition system, carburetor, etc.) from being damaged by overheating.

b) IMPORTANT: The Saw Blade will not rotate when the Engine idles.

c) When the Cut Off Saw is ready to operate, gently pull the Throttle Trigger backward to accelerate the Engine. Once the Engine accelerates, the Saw Blade will begin to rotate and speed up. When the blade speed is up and stable, you can begin to move the Saw slowly toward the object to be cut.

d) While holding the Cut Off Saw firmly, approach the object to be cut with the Saw Blade and increase pressure on the Cut Off Saw slowly until the Saw Blade is at the desired depth of cut. Move forward along a straight line to complete the cut.

e) Do not force the Saw Blade into the workpiece when cutting. Apply moderate pressure, allowing the Saw Blade to cut without being forced.

f) To stop or halt the cut (when a cut is completed, or the engine runs out of fuel during the cut, or an abnormal sound is heard), first:

   i. Lift the saw blade out of the cut.
   ii. Release the Throttle Trigger.
   iii. Wait until the engine slows down to idle speed and the blade stops rotating.
   iv. Turn off the saw.

6) Misc. Precautions

a) WARNING! Some dust created by power sanding, sawing, grinding, drilling and other construction activities, contain chemicals known to cause cancer, birth defects or other reproductive harm. Some examples of these chemicals are: lead from lead-based paints, crystalline silica from bricks and cement or other masonry products, arsenic and chromium from chemically treated lumber. Your risk from these exposures varies, depending on how often you do this type of work. To reduce your exposure to these chemicals: work in a well-ventilated area, and work with approved safety equipment, such as those dust masks that are specially designed to filter out microscopic particles.

b) WARNING! People with pacemakers should consult their physician(s) before using this product. Electromagnetic fields in close proximity to a heart pacemaker could cause interference to or failure of the pacemaker.

c) WARNING! The warnings and precautions discussed in this manual cannot cover all possible conditions and situations that may occur. It must be under stood by the operator that common sense and caution are factors which cannot be built into this product, but must be supplied by the operator.

Please contact Safety Coordinator @ 506-576-6683, if you have any questions regarding what is expected for the procedure or for clarification

The information contained in this publication is intended for general use and may not apply to every circumstance. It is not a definitive guide to government legislation and does not relieve persons using this publication from their responsibilities under the Workplace Safety and Health Act or applicable legislation.
The appropriate regulations and statutes should always be consulted and adhered to. Atlantic Roofers Limited/North Shore Roofing Ltd. and its affiliates do not guarantee the accuracy of, nor assume liability for the information presented here.

General

Protecting employees and general public from injuries associated with the use of Single Blade Cutting Machines.

Hazards Present

• Inhalation of Harmful Substances	• Fall from Height	• Cuts/Bruises
• Slips/Trips	• Strains/Sprains	• Fire/Explosion

Protective Mechanisms

• Fall Protection	• Manufacturers Recommendations	• Proper Clothing
• PPE	• Fire Extinguisher	

Equipment / Tools Required

• Cutting Machine	• Fuel (Gas)

Do ✓

- DO wear long sleeve shirts, buttoned at cuffs, glasses, goggles or face shield, hard hat, properly fitted pants without cuffs. Tie long hair back.
- DO replace worn, damaged or illegible labels from the manufacturer.
- DO keep the work area clean. Remove obstacles that could cause personal injury to the operator or others.
- DO inspect the machine before use.
- DO shut off engine when machine is not in use and/or not attended.
- DO properly guard and/or cover any roof openings. Use proper signs and warnings.
- DO read and understanding the operation manual before operating the Roof Cutter.

Do Not ✗

- DO NOT operate machine within 10 ft of the roof edge.
- DO NOT operate the unit without proper guards in place.
- DO NOT allow smoking anywhere around the machine.
- DO NOT allow flames or sparks near where the engine is being refueled.
- DO NOT operate if machine is damaged. Remove from service and have repaired by qualified person.
- DO NOT cut towards people, buildings, vehicles or other objects that could be damaged by flying debris.
- DO NOT touch the engine or muffler. They are hot and could cause burns.

Procedure

Figure 1

1) **Before you Operate the Roof Cutter**
   a) Make sure you understand the manufacturer's operation manual.
   b) Keep the work area clean. Remove obstacles that could cause personal injury to the operator or others.
   c) Wear the proper clothing such as, long sleeve shirts, buttoned at cuffs, glasses, goggles or face shield, hard hat, properly fitted pants without cuffs. Tie long hair back.

2) **Conduct a pre-starting inspection of equipment and work area**
   a) Check the engine crankcase oil. If the engine will not start or run it may be low on oil.

Procedure (con't)

2) Conduct a pre-starting inspection of equipment and work area (con't)

b) Make sure there is a fire extinguisher within easy access when operating gas powered machines.

c) Check the fuel supply. Fill with fresh, clean unleaded gasoline.

d) Securely tighten all caps of the engine and gas can after filling.

e) Clean up any spills completely and dispose in approved storage container.

f) Do not operate or test machine in an enclosed area.

g) Check for bent frames members, broken welds or damaged components. If damaged, remove from service to be repaired by qualified person.

3) Hoist the Machine to the Roof

a) Inspect the hoist.

b) Make sure everyone on the ground is completely clear of the hoisting area.

c) Consult your "Hoisting" Job Procedure for complete hoisting procedures.

d) Connect hooks from the hoist line to rings. Hoist using these rings only.

4) Adjust Cutting Depth

a) Check the depth of the roof system. The Roof Cutter can easily cut into the roof deck if the depth of cut is not set correctly.

b) The depth control bar is located on the right hand side of the machine.

c) By pushing down on the handle bars of the machine, the depth control will slide into the idle position.

d) Turning the depth control handle will increase the cutting depth. A counter clockwise rotation will raise the cutter blade.

Figure 2

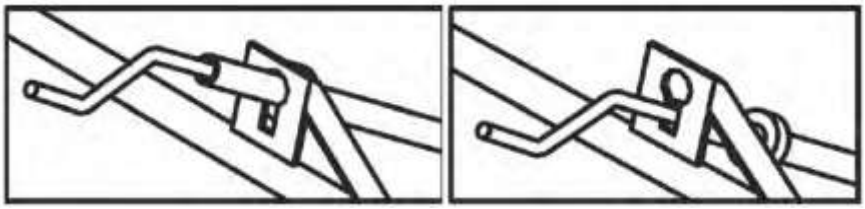

Cutter Blade in Cut Position Cutter Blade in Idle Position

5) Starting the machine

a) Ensure a clear pathway. Remove obstacles or people.

b) Do not wear loose clothing, jewelry or objects that may become entangled in moving parts.

c) Pull cord to start machine.

6) Operating the machine

a) Move lever to engage blade & turn handle to set depth.

b) Push forward in a ***straight line*** only to cut through roofing materials that will be removed.

c) The engine fins should be checked every 10 hours of machine use and more frequently in dusty situations. Dirt build-up will cause the engine to overheat.

***Procedure* (con't)**

7) Turning the machine

a) Lower the engine RPM to an idle speed.
b) Push down on the handles, after approximately 5 inches the top of the handle will drop down into the idle position (Figure 2)
c) Turn the Roof Cutter to face the desired direction for the next cut.
d) Turn up the engine RPM to full cutting speed.
e) Lift the handle and slowly lower the roof cutter back into the roof.
f) Before moving forward ensure that you are cutting into the roof only, and not into the decking material.

8) Pulling the Machine Backwards

a) If you have to pull the machine backwards make sure there are no people or property that flying debris could hit.
b) The machine will forcefully eject gravel and debris when pulled backwards. This should be avoided whenever possible.

9) Shut Down

a) Turn engine switch off.
b) Do not leave Roof Cutter unattended for at least 30 minutes after it has been shut down.
c) Clean engine fins with a roofing knife immediately after use, while any asphalt is still hot and liquid. Overheating of the engine is a common cause of engine failure. Dirt buildup can reduce the amount of air being directed into the engine for cooling. In addition, when the cooling fins of engine build up with aphalt and wood fibers, it can become a serious fire hazard.
d) The engine cylinder barrel and cooling fins should be sprayed with an orange cleaner or other degreaser to reduce the remaining asphalt.

REFERENCES:
Form F-07-5 General Roofing Powered Equipment Daily Pre-use Inspection

Please contact Safety Coordinator @ 506-576-6683, if you have any questions regarding what is expected for the procedure or for clarification

The information contained in this publication is intended for general use and may not apply to every circumstance. It is not a definitive guide to government legislation and does not relieve persons using this publication from their responsibilities under the Workplace Safety and Health Act or applicable legislation.
The appropriate regulations and statutes should always be consulted and adhered to. Atlantic Roofers Limited/North Shore Roofing Ltd. and its affiliates do not guarantee the accuracy of, nor assume liability for the information presented here.

General

Protecting employees and general public from injuries associated with the use of Gravel Spreaders.

Hazards Present

• Inhalation of Harmful Substances	• Fall from Height	• Falling Objects
• Slips/Trips	• Strains/Sprains	• Fire/Explosion

Protective Mechanisms

• Fall Protection	• Manufacturers Recommendations	• WHMIS Training
• PPE	• Fire Extinguisher	

Equipment / Tools Required

• Power Buggy/Workhorse	• Fuel (Gas)	• Hoist

Do

- DO ensure this equipment is used by a competent person who has read and understood the job procedure
- DO wear sensible, protective clothing and footwear offering good grip, plus work gloves and a hard hat
- DO always clean up any spills immediately
- DO ensure all guards are properly installed
- DO avoid excessive bending. Sweep smaller debris into piles and shovel into cart
- DO wear boots with good traction, safety eyewear and dust mask if required

Do Not

- DO NOT leave motorized equipment running while unattended
- DO NOT use this equipment if you are ill, feeling tired or under the influence of alcohol or drugs
- DO NOT store fuel on or close to a hot engine
- DO NOT smoke in refueling areas
- DO NOT wear loose clothing, jewelry or objects that may become entangled in moving parts
- DO NOT overload the gravel bucket

Procedure

1) **Conduct a pre-starting inspection of equipment and work area**
   a) Make sure there is a fire extinguisher within easy access when operating gas powered machines.
   b) Double check the equipment's general condition before the start of each work day.
   c) Make sure you read and understand the manufacturer's instructions and job procedures.
   d) Check the gas & oil levels and refill as necessary. Always clean up spills immediately.

2) **Check Load Limits and Capacities**
   a) Check roof load limits and capacities with builder, owner and architect or on site engineer.

Loaded Machine and Attachment Weights (Approximate)

Combination	Weight
Power Unit with Gravel Spreader	1175 lbs plus load

Capacities

Combination	Capacity
Gravel Spreader	6.0 cubic feet

For calculating the loads the following data may be used: Gravel weighs approx.. 108 lbs per cu. Ft.

**** Check with your material sources for the actual weight of the material that you are using.***

Procedure (con't)

3) Attach the Gravel Spreader

a) A hammer and pliers are required for the installation of the gravel spreader attachment.

b) Install the gravel spreader as shown in Figure 1.

c) The shaft ends of the spreader drop into "U" mount brackets at the front of the power unit frame.

d) Two swivel locks open and close on top of the power unit to lock the gravel spreader into place.

e) To install the handle and linkage, first attach the linkage to the dispenser and then connect other end with handle and secure with provided bolts and nuts.

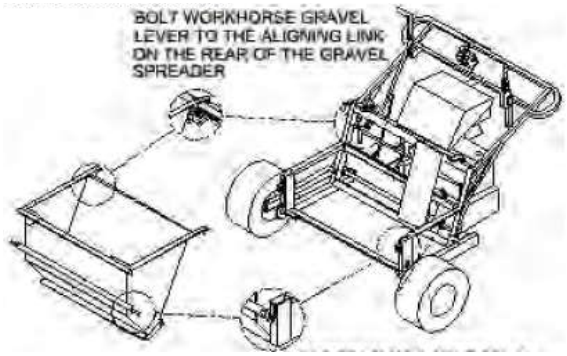

Figure 1

f) An adjustment screw is located on the upper right corner of the dispenser. Clockwise adjustment of the screw will make the dispenser door open less. Counter clockwise makes the door open more.

g) The yoke assembly on the back of the dispenser is preset to the proper door tension.

h) If more tension is needed for door closure, remove the clevis pin on the yoke and tighten as needed.

4) Hoist the Machine to the Roof

a) Inspect the hoist.

b) Make sure everyone on the ground is completely clear of the hoisting area.

c) Consult your "Hoisting" Job Procedure for complete hoisting procedures.

d) Connect hooks from the hoist line to rings provided on side of Cart. Hoist using these rings only.

e) Approximate Machine & Attachment Weights

Power Unit	340 lbs
Gravel Spreader	150 lbs

5) Engine Startup

a) Remove any objects that could injure hands or arm when pulling start cord.

b) Do not wear loose clothing, jewelry or objects that may become entangled in moving parts.

c) Ensure all guards are properly installed.

d) Pull cord to start machine.

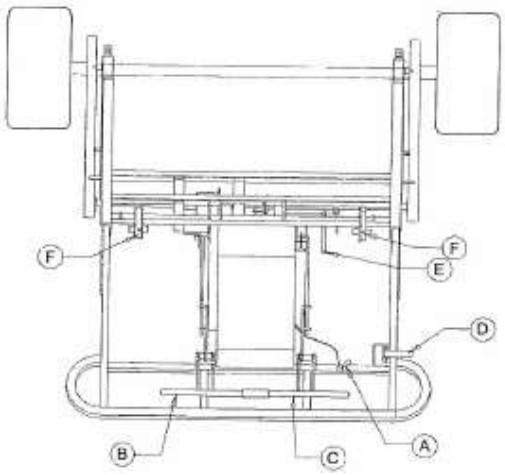

Figure 2

A – Throttle Control
B – Clutch Handle
C – Brake Handle
D – Gravel Bucket Handle
E – Dump Bucket Release Handle
F – Gravel Spreader Swivel Lock

To move the power unit, powered, push down on Clutch Handle, B.

To push the power unit forward, unpowered, push down on the Brake Handle, C.

The speed is controlled by the Throttle Lever, A. The higher the engine RPM, the faster the machine will travel.

Gravel dispensing lever is located furthest to the right. Pulling back on the gravel spreader handle, D, opens the gate at the bottom of the gravel spreader. Pushing forward on the lever closes the door.

Procedure **(con't)**

5) Engine Startup (con't)

e) When operating machine for the first time position the machine on the ground or in an open level area away from obstructions and roof edges.

f) Start the machine by pulling the cord and allow to warm up for 5 minutes.

g) With no load on the machine, practice maneuvering the machine by operating the controls.

h) All operators must check to see that the brake is functioning properly.

i) When the Forward / Reverse handle is released the machine should stop instantly. If it doesn't, do not operate the machine until repairs or adjustments are made.

6) Operation

a) Ensure a clear pathway. All obstacles or people should be clear.

b) The machine is designed for use inside perimeter warning line system.

c) Do not operate within 10 feet of the roof edge. (or 6 feet of operating parallel to the roof).

d) Never attempt to override the safety hydraulic system.

e) Turn the machine off when not in actual use by a qualified operator.

7) Backing Up

a) *Never back up within 10 feet of an edge.* (or 8 feet of operating parallel to the roof)

b) Always look behind before reversing direction.

c) Walking backwards creates an additional trip hazard, proceed backward slowly.

8) Secure Equipment at End of Shift

a) Make sure equipment is in a safe, secure location and all locks are in place, fuel is shut off, etc.

9) Maintenance

a) Disconnect spark plug wire before working on machine

b) Lubrication recommendations are as follows:

i) Grease roller bearings in wheel hubs as well as pillow block bearings on brake and differential shaft weekly, or more often as needed.

ii) All moving parts in the control linkage as well as the chains should be kept well-oiled to prevent rust and encourage free movement.

iii) All moving parts should be checked regularly for debris buildup and if it occurs should be cleaned with a wire brush.

c) Check condition of hydraulic oil frequently. If the oil begins to look black or dirty change immediately.

REFERENCES:

Form F-07-5 General Roofing Powered Equipment Daily Pre-use Inspection

Please contact Safety Coordinator @ 506-576-6683, if you have any questions regarding what is expected for the procedure or for clarification

The information contained in this publication is intended for general use and may not apply to every circumstance. It is not a definitive guide to government legislation and does not relieve persons using this publication from their responsibilities under the Workplace Safety and Health Act or applicable legislation.
The appropriate regulations and statutes should always be consulted and adhered to. Atlantic Roofers Limited/North Shore Roofing Ltd. and its affiliates do not guarantee the accuracy of, nor assume liability for the information presented here.

General

The RhinoBond System produces heat that can seriously injure people and damage metal objects. Failure to follow all instructions could result in property damage, serious personal injury, electric shock or death.

Hazards Present

• Electrical Shock	• Serious Personal Injury	• Death
•	•	•

Protective Mechanisms

• Fall Protection	• Manufacturer's Instructions	• PPE

Equipment / Tools Required

• RhinoBond Tool	• Cooling Clamps	• RhinoBond Fasteners and Plates
• Power Cord (100 ft max./12 gauge min.)	• Grease Pencil	• Pliers & Plunger

Do ✓

- DO unplug the cord before attempting to inspect or clean the tool, or you risk electrical shock.
- DO keep the cord away from heat, liquids, sharp edges and moving parts.
- DO stop using the tool if the cord is damaged. Notify your supervisor so he/she can arrange repairs with an authorized RhinoBond System Service Technician.
- DO stay alert and aware when using the RhinoBond tool.
- DO read and understanding the operation manual before operating the RhinoBond Tool.
- DO inspect the tool before use.

Do Not ✗

- DO NOT use this tool if you (or anyone near you has) a pacemaker, surgical implant, prosthesis or other medical device.
- DO NOT activate tool over metal objects in or on the floor.
- DO NOT allow any objects containing metal, such as jewelry, watches, etc., within 3 inches of the bottom of the tool during use.
- DO NOT activate the tool over the power cord.
- DO NOT operate the unit without proper guards in place.
- DO NOT use the cord to carry the tool.
- DO NOT operate if tool is damaged. Remove from service and have repaired by qualified person.
- DO NOT use this tool when tired or under the influence of drugs, alcohol or medication that can alter your awareness.

Procedure

1) RhinoBond System Components (See Figure 1)

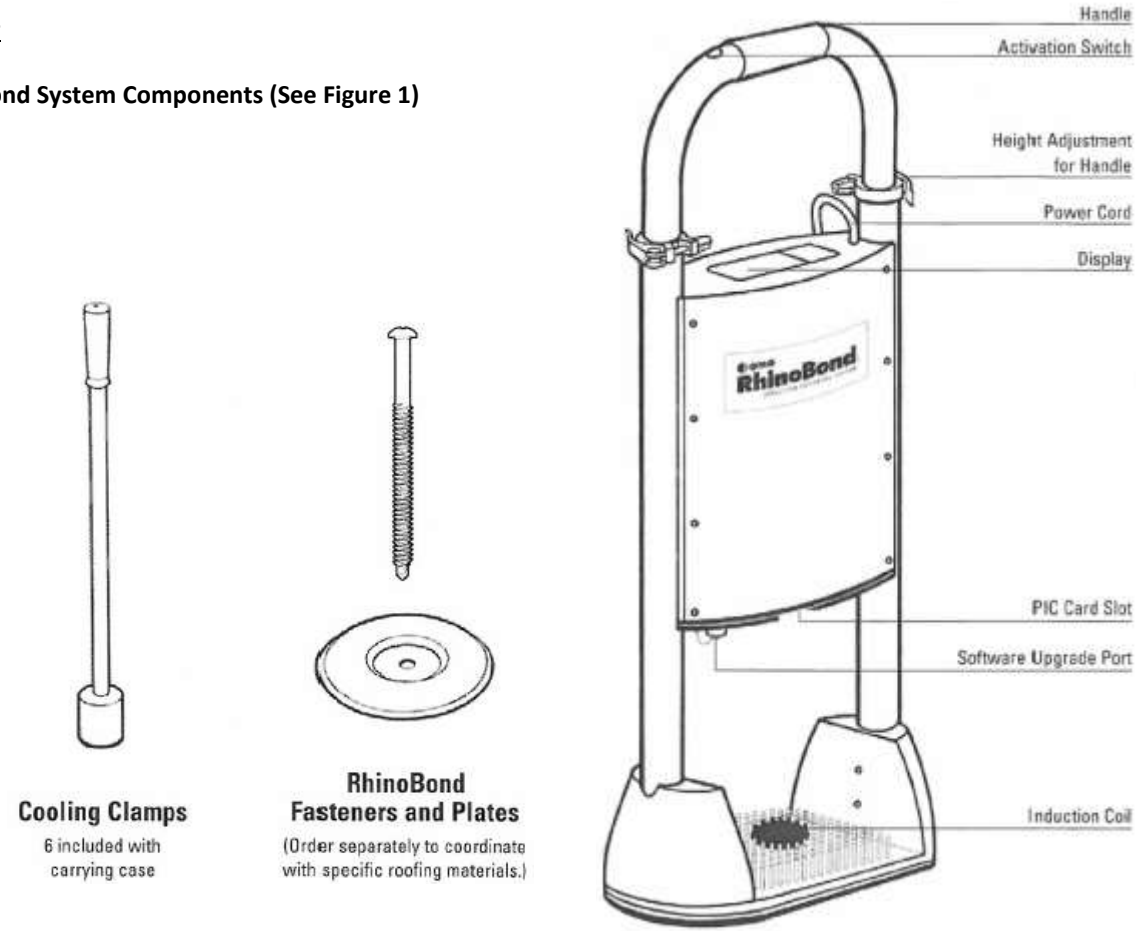

Figure 1

2) Conduct a pre-starting inspection of equipment and work area

a) Inspect the tool before use to ensure there are no defects or damages to the tool or power cord.

b) Make sure you read and understand the manufacturer's instructions and job procedures.

c) Keep the work area clean. Remove obstacles that could cause personal injury to the operator or others.

3) Install the Plates

a) It is important to install plates in a straight line. This will improve system performance and help you more easily identify plates under the membrane. (See Figure 2)

b) Based on manufacturer's fastening pattern, use chalk lines to guide fastener/plate placement.

c) Lay insulation over substrate. Place plates in pattern specified by roofing system manufacturer.

d) Secure plates with RhiniBond fasteners. For best installation results, use a variable speed screw gun. (2,500 rpm max.)
Do not overdrive fasteners. (See Figure 3)

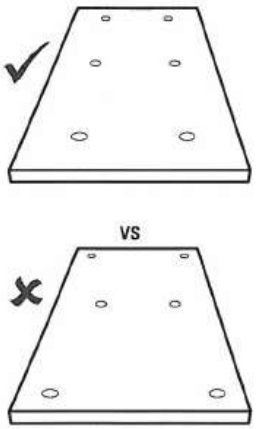

Figure 2

Procedure **(con't)**

Important Tip
Whenever the ambient temperature changes by 15°F (warmer or cooler) recalibrate the RhinoBond tool.

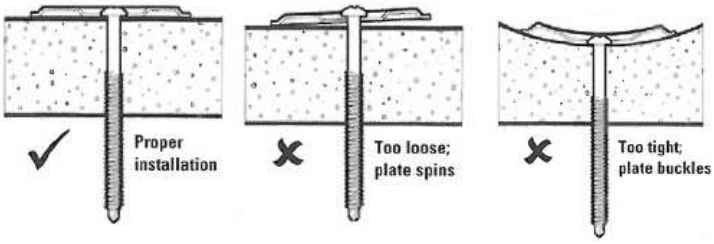

Figure 3

4) Calibrate the RhinoBond Tool

a) Adjust the RhinoBond tool for maximum bond strength based on the ambient temperature (from 0°F to 120°F / -18°C to 49°C) and membrane thickness. Adjust the energy level to produce an optimal bond.

b) Start calibration at 0 and test samples at +1, +2, +3, etc.

c) Use the following **calibration process** to adjust the energy setting **for each tool** to the appropriate level for the conditions on the job.

Figure 4

(1) **Place 5 plates** on a sample of your insulation, 10" apart. (Do **not** use screws.) Lay a sample of your membrane over the plates. (See Figure 4)

(2) **Locate each plate** by rubbing the membrane with the sole of your boot.

(3) **Plug the tool** into a stable 120V/20A energy source.

(4) **Determine initial energy setting** to produce an optimal bond. Press ▲ or ▼ next to the display to change the energy setting and press Select.

(5) **Center red circle** of the tool directly over the first plate. (Figure 5)

Figure 5

(6) **Activate the weld** using the "Activation" button on the handle.

(7) **While the tool is activated (welding), trace around the base** of the tool with a grease pencil. This will help you judge your accuracy in centering the coil over the plate. (Figure 6)

Warning
Do not move the RhinoBond tool during cycle.

(8) **Remove the tool** after the cycle ends and immediately set a cooling clamp directly onto the center of the plate. (Figure 7)

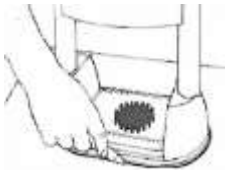

Figure 6

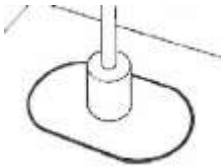

Figure 7

(9) **Mark the energy setting** next to the plate position with a grease pencil. (Figure 8)

Figure 8

(10) **Repeat this process** for each plate, increasing the energy +1 unit each time. **Allow plates to cool completely,** at least 5 minutes, before continuing.

(11) If your calibration sample is attached to the roll of membrane, **cut it off**.

(12) **Remove the cooling clamps** and turn membrane over to reveal the welded plates.

(13) **Use pliers to peel each plate off** of the membrane. Check bond results as per Figure 9.

Procedure **(con't)**

Bond Results

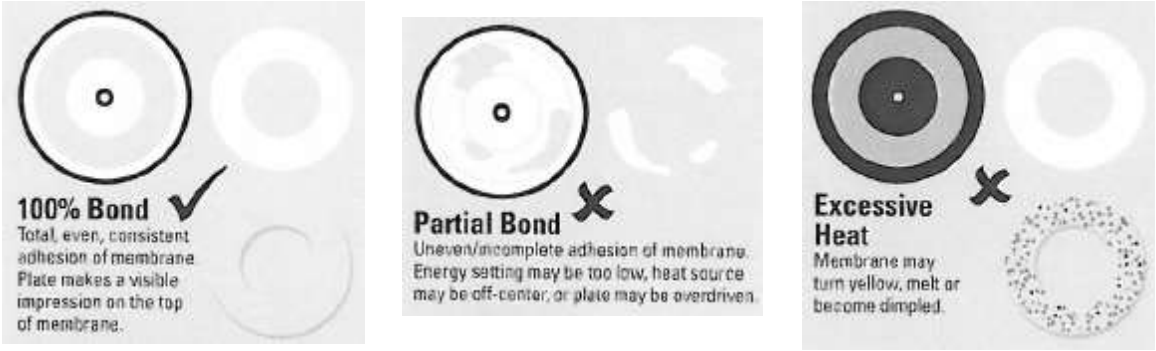

Figure 9

5) Bond the Membrane

a) Set tool to level that provides a 100% bond. Several settings may yield a 100% bond. If this happens, select the middle energy level setting. (See Figure 9 for examples of optimal and desirable bonds.

b) Adjust the handle height, if desired, by releasing handle clamps and gently pulling or pushing handle to desired position.

c) Center the calibrated tool over the first plate in pattern and activate the weld. **Tool must be centered over the plate to create a 100% bond.**

d) Place cooling clamp over the welded plate. Keep cooling clamp in place at least 45 seconds while the assembly cools.

e) Repeat process for each plate.

Important Tip
Read Additional Display Options in Manufacturer's manual for useful display messages and optional features.

Important Tip
To increase your pace, work across the sheet, moving cooling clamps from one row to the next as you need them.

6) RhinoBond Weld Test

a) To determine if a weld has been made, place the plunger next to a welded plate and create enough suction to lift the membrane. A weld will crease the membrane as shown in Figure 10. If the assembly is not welded, the membrane will lift up from the plate.

b) Mark any plates that are not welded as a reminder to complete the weld.

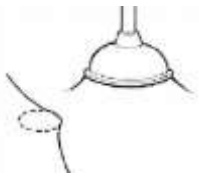

Figure 10

7) Shut Down

a) Make sure tool is shut off and put away in case for safe keeping. Do not leave on the roof. Store in a safe, dry location between uses.

Please contact Safety Coordinator @ 506-576-6683, if you have any questions regarding what is expected for the procedure or for clarification

The information contained in this publication is intended for general use and may not apply to every circumstance. It is not a definitive guide to government legislation and does not relieve persons using this publication from their responsibilities under the Workplace Safety and Health Act or applicable legislation.
The appropriate regulations and statutes should always be consulted and adhered to. Atlantic Roofers Limited/North Shore Roofing Ltd. and its affiliates do not guarantee the accuracy of, nor assume liability for the information presented here.

General

Protecting employees and general public from injuries associated with the use of Ripping Machines.

Hazards Present

• Inhalation of Harmful Substances	• Fall from Height	• Cuts/Bruises
• Slips/Trips	• Strains/Sprains	• Fire/Explosion

Protective Mechanisms

• Fall Protection	• Manufacturers Recommendations	• Proper Clothing
• PPE	• Fire Extinguisher	

Equipment / Tools Required

• Ripping Machine	• Fuel (Gas)

Do ✓

- DO wear long sleeve shirts, buttoned at cuffs, glasses, goggles or face shield, hard hat, properly fitted pants without cuffs. Tie long hair back.
- DO replace worn, damaged or illegible labels from the manufacturer.
- DO keep the work area clean. Remove obstacles that could cause personal injury to the operator or others.
- DO inspect the machine before use.
- DO shut off engine when machine is not in use and/or not attended.
- DO properly guard and/or cover any roof openings. Use proper signs and warnings.
- DO read and understanding the operation manual before operating the Roof Cutter.

Do Not ✗

- DO NOT operate machine within 10 ft of the roof edge.
- DO NOT operate the unit without proper guards in place.
- DO NOT allow smoking anywhere around the machine.
- DO NOT allow flames or sparks near where the engine is being refueled.
- DO NOT operate if machine is damaged. Remove from service and have repaired by qualified person.
- DO NOT cut towards people, buildings, vehicles or other objects that could be damaged by flying debris.
- DO NOT touch the engine or muffler. They are hot and could cause burns.

Procedure

1) **Before you Operate the Ripping Machine**
   a) Make sure you understand the manufacturer's operation manual.
   b) Make sure there is a fire extinguisher within easy access when operating gas powered machines.
   c) Keep the work area clean. Remove obstacles that could cause personal injury to the operator or others.
   d) Wear the proper clothing such as, long sleeve shirts, buttoned at cuffs, glasses, goggles or face shield, hard hat, properly fitted pants without cuffs. Tie long hair back.

Figure 1

2) **Conduct a pre-starting inspection of equipment and work area**
   a) Check the engine crankcase oil. If the engine will not start or run it may be low on oil.

***Procedure* (con't)**

3) Conduct a pre-starting inspection of equipment and work area (con't)

a) Check the fuel supply. Fill with fresh, clean unleaded gasoline.
b) Securely tighten all caps of the engine and gas can after filling.
c) Clean up any spills completely and dispose in approved storage container.
d) Do not operate or test machine in an enclosed area.
e) Check for bent frames members, broken welds or damaged components. If damaged, remove from service to be repaired by qualified person.

4) Hoist the Machine to the Roof

a) Check the roof and deck for deterioration before allowing personnel or equipment access to the roof. Make certain the roof and structure is strong enough to support the weight.
b) Inspect the hoist.
c) Make sure everyone on the ground is completely clear of the hoisting area.
d) Consult your "Hoisting" Job Procedure for complete hoisting procedures.
e) Connect hooks from the hoist line to rings. Hoist using these rings only.

5) Check Roof Depth

a) Check the depth of the roof system. The powerful hydraulic system on a Roof Remover can easily cut into the roof deck with the Roof Remover or Double Cutter Attachments.
b) The Roof Remover Attachment is available with several different blade options (Figure 2):

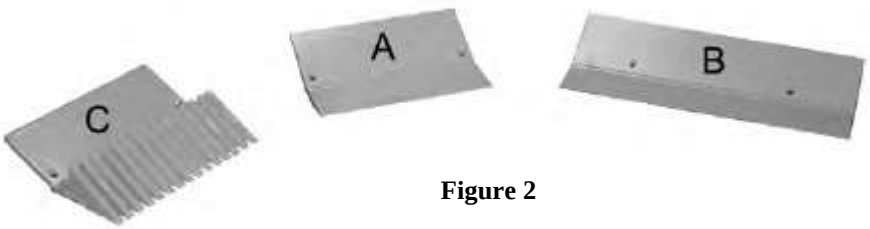

Figure 2

A. **15" Angled Blade** – This is the standard blade included with a Roof Remover Attachment. Its high carbon steel, heat treated edge will remove most forms of roofing.
B. **24" Angled Blade** – This blade is designed for lighter duty, high production jobs. A larger piece of roof can be lifted with this blade. It is important to center the load on the middle of this blade while using it, as a side load can result in damage to the Roof Remover frames.
C. **15" Toothed Blade** – Designed for use in the most rugged of tear offs or in situations with a large number of mechanical fasteners. The 15" toothed blade cuts the contact area of the blade in half, doubling the impact strength of the blade against roof materials.

6) Starting the machine (See Figure 3)

a) Ensure a clear pathway. Remove obstacles or people.
b) Do not wear loose clothing, jewelry or objects that may become entangled in moving parts.
c) Before anything else you must turn the speed control lever (C) to the slowest position.

Caution: Never start the tractor or activate the wheel control lever (A) before first turning the speed control lever (C) to the slowest position possible.

d) Turn the on/off switch on the engine to the on position and start the engine.

***Procedure* (con't)**

A – Wheel Control Lever
B – Accessory Control Lever
C – Speed Control Lever
D – Hydraulic Tank Filler/Breather Cap

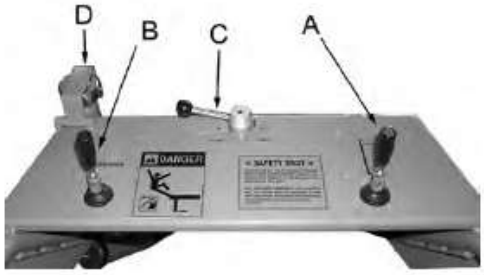

Figure 3

7) Operating the machine

a) With the speed control lever (C) set to minimum speed, engage the wheel control lever (A) in the forward direction. The machine should not move.

b) Activate the Roof Remover hydraulic ram by pushing the Accessory Control Lever (B) into the forward position.

c) Slowly turn the speed control lever (C) towards the FAST position, the tractor should slowly accelerate.

d) When the machine gets to the desired speed stop turning the speed control lever.

8) Stopping the machine

a) Use the speed control lever (C) to stop the machine by turning it to the SLOW position.

b) Only change between forward and reverse movement when the speed control lever is set to a minimum. The power of the Roof Remover can damage itself if the machine is engaged through the forward/reverse lever while the speed control is set to a high velocity.

9) Shut Down

a) Turn engine switch off.

10) Maintenance

a) Lubrication

A	Rod Ends	Grease Daily
B	Bearings	Grease Daily
C	Remover Chain	Lubricate with Oil Daily
D	Actuator System	Grease Hourly as required
E	Tractor Drive Chain	Lubricate with Oil Daily

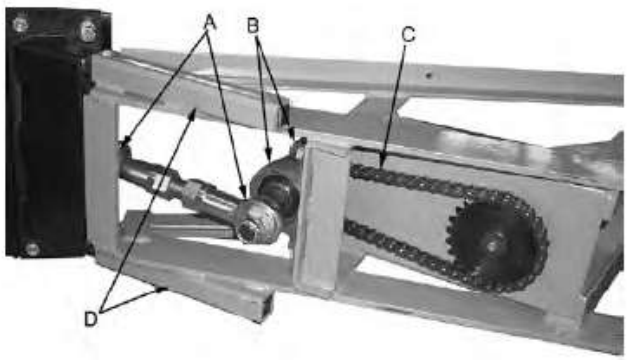

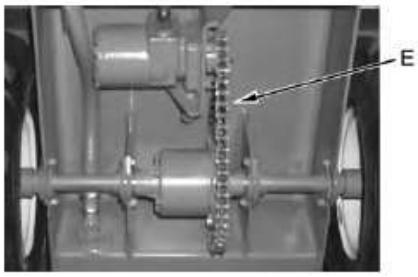

***Procedure* (con't)**

11) Maintenance (con't)

b) Hydraulic Fuel Levels are monitored with an oil level gauge located on the rear of the hydraulic tank near the operator's feet. Check before the engine is first started and after 25 hours of operation.

c) Engine oil should be changed after every 25 operating hours. Change more frequently when operating conditions are extremely dusty.

d) Check the battery electrolyte level every 25 hours. Always keep the battery fully charged and clean. If the battery terminals are corroded, clean with a solution of water and baking soda. Under normal operating conditions the battery fluid levels may drop. To bring the fluid up to the required level, add distilled water.

   i) Clean the top of the battery and remove the filler caps
   ii) Remove cell caps and check the electrolyte level in each cell. The level should be even with the bottom of the fill tubes. Interior plates must be covered.
   iii) Add distilled water as needed to bring each cell up to full level.
   iv) When the electrolyte decreases rapidly, check the charging system for overcharging.
   v) Periodically check each cell for the correct specific gravity. After adding distilled water, charge the battery up by operating the engine and then check the specific gravity.
   vi) Replace filler caps. Clean up spills with water and paper towels.

REFERENCES:

Form F-07-5 General Roofing Powered Equipment Daily Pre-use Inspection

Please contact Safety Coordinator @ 506-576-6683, if you have any questions regarding what is expected for the procedure or for clarification

The information contained in this publication is intended for general use and may not apply to every circumstance. It is not a definitive guide to government legislation and does not relieve persons using this publication from their responsibilities under the Workplace Safety and Health Act or applicable legislation.
The appropriate regulations and statutes should always be consulted and adhered to. Atlantic Roofers Limited/North Shore Roofing Ltd. and its affiliates do not guarantee the accuracy of, nor assume liability for the information presented here.

General

Protecting employees and general public from injuries associated with the use of the Sweeper.

Hazards Present

• Inhalation of Harmful Substances	• Fall from Height	• Cuts/Bruises
• Slips/Trips	• Strains/Sprains	• Fire/Explosion

Protective Mechanisms

• Fall Protection	• Manufacturers Recommendations	• Proper Clothing
• PPE	• Fire Extinguisher	

Equipment / Tools Required

• Ripping Machine	• Fuel (Gas)

Do ✓

- DO wear long sleeve shirts, buttoned at cuffs, glasses, goggles or face shield, hard hat, properly fitted pants without cuffs. Tie long hair back.
- DO replace worn, damaged or illegible labels from the manufacturer.
- DO keep the work area clean. Remove obstacles that could cause personal injury to the operator or others.
- DO inspect the machine before use.
- DO shut off engine when machine is not in use and/or not attended.
- DO properly guard and/or cover any roof openings. Use proper signs and warnings.
- DO read and understanding the operation manual before operating the Roof Cutter.

Do Not ✗

- DO NOT operate machine within 10 ft of the roof edge.
- DO NOT operate the unit without proper guards in place.
- DO NOT allow smoking anywhere around the machine.
- DO NOT allow flames or sparks near where the engine is being refueled.
- DO NOT operate if machine is damaged. Remove from service and have repaired by qualified person.
- DO NOT cut towards people, buildings, vehicles or other objects that could be damaged by flying debris.
- DO NOT touch the engine or muffler. They are hot and could cause burns.

Procedure

1) **Before you Operate the Sweeper**
   a) Make sure you understand the manufacturer's operation manual.
   b) Make sure there is a fire extinguisher within easy access when operating gas powered machines.
   c) Keep the work area clean. Remove obstacles that could cause personal injury to the operator or others.
   d) Wear the proper clothing such as, long sleeve shirts, buttoned at cuffs, glasses, goggles or face shield, hard hat, properly fitted pants without cuffs. Tie long hair back.

Figure 1

2) **Conduct a pre-starting inspection of equipment and work area**
   a) Check the engine crankcase oil. If the engine will not start or run it may be low on oil.

***Procedure* (con't)**

2) Conduct a pre-starting inspection of equipment and work area (con't)

b) Check the fuel supply. Fill with fresh, clean unleaded gasoline.

c) Securely tighten all caps of the engine and gas can after filling.

d) Clean up any spills completely and dispose in approved storage container.

e) Do not operate or test machine in an enclosed area.

f) Check for bent frames members, broken welds or damaged components. If damaged, remove from service to be repaired by qualified person.

g) Have each operator practice maneuvering the machine around turns and at different speeds, in a flat open area on the ground before roof top operation. There should be a minimum of 30 minutes ground practice for each operator.

3) Hoist the Machine to the Roof

a) Check the roof and deck for deterioration before allowing personnel or equipment access to the roof. Make certain the roof and structure is strong enough to support the weight.

b) Properly guard and/or cover any roof openings. Use proper signage and warnings around these areas.

c) Inspect the hoist.

d) Make sure everyone on the ground is completely clear of the hoisting area.

e) Consult your "Hoisting" Job Procedure for complete hoisting procedures.

f) Connect hooks from the hoist line to rings. Hoist using these rings only.

4) Starting the machine

a) Ensure a clear pathway. Remove obstacles or people.

b) Do not wear loose clothing, jewelry or objects that may become entangled in moving parts.

c) Do not operate machine within 10 ft of the roof edge. Always have a proper perimeter warning line system or guardrail system.

d) Start Motor.

5) Operation of machine (See Figure 2)

a) Slowly engage the clutch (B) to avoid rapid starts and damage or injury from machine tipping or kicking back.

b) Move sweeper to work area.

c) Sweep roof area using the left handle (A) to engage brush.

Controls:

Figure 2

A Brush Angle Control (Center, 15° Right, 15° Left)
B Wheel drive and Brush drive engagement lever

Warning:

1. Always push down on the handles (lifting brush) before engaging the drive lever.
2. If the machine creeps ahead without the handles engaged then the controls must be adjusted.
3. Never adjust the controls while the engine is running.

***Procedure* (con't)**

5) Operation of machine (con't)

Controls: (con't)

Adjustments to the Wheel and Brush Drive Clutch

If the drive belt is slipping or if the machine is moving with the levers released, the clutch may be out of alignment. The clutch can be adjusted by modifying the length of the cable running between the handle and the clutch arm. The length of the cable is controlled by a U-Bolt (See Figure 3)

Figure 3

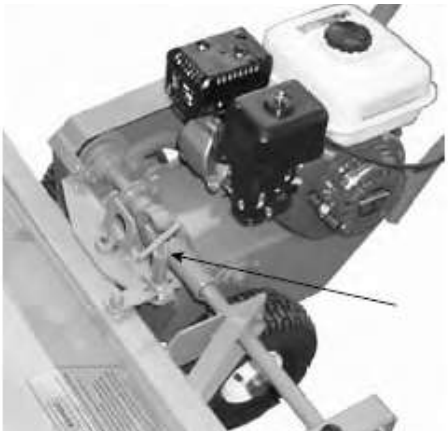

Adjustments to the Brush Angle

The brush angle is controlled through the brush angle bar. To change the brush angle; lift the spring loaded pin and move brush into the desired angle. By releasing the pin the brush angle will lock into position.

Figure 4

6) Shut down

a) Whenever the sweeper is left unattended, SHUT OFF THE ENGINE, even if leaving the machine for only a few seconds.

b) Reach down and flip the shut-off lever to the off position to shut down the engine.

7) Maintenance

c) Dirt buildup in the spur gears can slowly push the gears apart, reducing the contact of the gear teeth. If the gears become separated sufficiently the drive system can fail, breaking the teeth from the gears. If dirt buildup is found in the spur gears, clean with a wire brush.

REFERENCES:

Form F-07-5 General Roofing Powered Equipment Daily Pre-use Inspection

Please contact Safety Coordinator @ 506-576-6683, if you have any questions regarding what is expected for the procedure or for clarification

The information contained in this publication is intended for general use and may not apply to every circumstance. It is not a definitive guide to government legislation and does not relieve persons using this publication from their responsibilities under the Workplace Safety and Health Act or applicable legislation.
The appropriate regulations and statutes should always be consulted and adhered to. Atlantic Roofers Limited/North Shore Roofing Ltd. and its affiliates do not guarantee the accuracy of, nor assume liability for the information presented here.

General

Where there is a potential fall hazard, work must be carried out without undue risk to the worker.

Hazards Present

• Minor Injury	• Severe Injury	• Death

Protective Mechanisms

• PPE / Control Zones	• Manufacturers Recommendations	• Training/Supervision

Equipment / Tools Required

• Full Body Harness • Anchor Point that can withstand 5000 lbs.	• Energy Absorbing Lanyard/ Self-Retracting Lanyard • Rope Grab / Lifeline	• Guardrails • Safety Monitor

Do

- DO ensure that fall protection plans are site specific and address the type of equipment used at the workplace
- DO inspect all equipment before each use
- Do remove from service if used in a fall
- DO read and understand manufacturer's instructions
- DO ensure anchorage points are rigid
- DO use caution around moving machinery, electrical hazards, chemical hazards and sharp edges
- DO have a rescue plan and the ability to implement a rescue. Training should be provided on a periodic basis

Do Not

- DO NOT alter or intentionally misuse equipment
- DO NOT use if subjected to fall arrest forces
- DO NOT install or use if you have not been trained in its correct application and use
- DO NOT use if there is a reason to doubt your fitness to absorb the impact from a fall arrest
- DO NOT store equipment in direct sunlight. Avoid areas where chemical vapors are present

Procedure

1) Definition/Explanation

a) The purpose of this Code of Practice (COP) is to ensure that all Atlantic Roofer Limited employees, contractors and subcontractors engaged in working at and may fall at vertical distances of:

i) 3 meters (10 ft.) or more above water or the nearest safe level.

ii) Above any surface or object that could cause injury to the employee upon contact.

iii) Above any open top tank, bin, hopper or vat

b) For employees to thoroughly understand how to protect themselves and others present at the worksite where working at heights is required. The focus of this COP is on *training* and *equipping* employees with the tools necessary to eliminate or control the hazards associated with working at heights.

2) Identified Hazards

a) Sites may vary in what hazards they have but the compiled hazards of Atlantic Roofers Limited and North Shore Roofing sites are:

i) Flat roofs, edge and control zones and roof access doors

ii) Sloped roofs

iii) Arial lifting devices

iv) Work from Scaffolding and ladders

Procedure (con't)

2) Identified Hazards (con't)

v) Mezzanine openings
vi) Construction sites, openings in roof, hazardous objects or surfaces

b) Risks of injury

i) Minor injury
ii) Severe injury
iii) Death

3) Training Required

a) Only Atlantic Roofer Limited and North Shore Roofing employees adequately trained in fall protection will conduct work when fall protection system use is required. Fall protection training must include general information about the hazards associated with working at heights and specific information regarding control methods available to control these known hazards.

b) There are several different internal and external fall protection courses available and it is the responsibility of each Branch to determine the training required to help employees perform their jobs in a healthy and safe manner. Suggested courses are:

i) Provincial Construction Safety Association Fall Protection Generic Course
ii) In House Fall Protection Generic (Given by Safety Coordinator)
iii) In House Fall Protection Refresher (Given by Safety Coordinator)

4) Inspection

a) Prior to the use of any component, a pre-use inspection must be conducted on each work shift by the worker using them as required by the manufacturer.

b) Training required prior to being given this responsibility must ensure that this inspection requirement is effectively communicated to all workers having to perform inspections and that workers are adequately trained on proper inspection methods.

c) Items to check for during inspections include:

i) Mildew, wear or damage
ii) Cuts, tears, or abrasions
iii) Stretching and loose or damaged stitching
iv) Loose or damaged mountings
v) Cracked, broken and deformed D rings or snap hooks
vi) Contact with fire, acids or other corrosives
vii) Distorted hooks or faulty hook springs
viii) Tongues ill-fitted to the shoulder of buckles
ix) Ropes that show wear or internal deterioration
x) Damaged mechanical operating components
xi) Any other item specified by the manufacturer

d) This inspection should be repeated at the end of each use to determine if the component sustained and damage during work activities. If the component is found to have any deficiencies, it must be removed from service immediately and tagged "Unstable" or destroyed.

***Procedure* (con't)**

5) Maintenance

a) When needed, wash the fall protection equipment in warm water using a mild detergent. Rinse thoroughly in clean warm water and allow drying at room temperature. Never use high pressure washers on equipment components, which may drive contaminates deeper into fabric materials. Besides regularly scheduled inspections, many components used as part of fall protection systems will require defined manufacturer inspections. When in doubt, check with the manufacturer recommendations or specifications.

6) Storage

a) All fall protection components should be stored in a clean area away from strong sunlight and extreme temperatures which could degrade materials. Check manufacturer's recommendations or specification for specific storage requirements.

7) System Types

a) While there are multiple types of systems and applications, fall protection is most easily classified as belonging to 1 of 2 groups, passive or active.

b) Passive Systems

i) There are two kinds of passive systems; *control zones* and *guardrails*. Both of these are intended to protect workers by keeping them away from the falling edge, catching them in the event of a fall, or preventing contact with lower surfaces below.

ii) These passive systems allow workers the ability to perform their work unencumbered by the wearing of fall protection equipment. When properly designed and constructed these systems will protect workers 100% of the time.

c) Active Systems

i) These systems are personal fall arrest systems that stop a worker in a fall from a working height. While these systems limit the workers' freedom of movement while performing their jobs, these systems are also designed to limit both the distance fallen and the amount of injury incurred. These systems can be applied to many situations but are generally referred to as belonging to one of three types:

1) Horizontal Systems
2) Restraint Systems
3) Vertical Systems

d) Temporary and permanent horizontal lifeline systems are engineered systems which allow workers mobility along a working surface. These systems must be designed, installed and used in accordance with the manufacturers or professional engineers' specifications. These instructions will indicate the intended application, operation, use, training and inspection requirements.

e) Restraint systems prevent workers from travelling to an edge or position where a fall could occur. These systems can be anchored using anchor plates or may be used in conjunction with horizontal systems to limit horizontal movement to a given distance.

f) Vertical systems are typically assembled by the end-user. Accessory component selection for vertical systems may remain similar to that of horizontal systems; however, component selection for vertical systems must be determined in conjunction with total fall distance and fall clearance requirements. This determination is entirely the responsibility of the end-user. End-users must also remain aware of methods by which they might reduce those forces, primarily by limiting their falling distance and/or by selecting a higher anchor point. Regardless of the active system type selected, end users should remain aware of the forces applied to their bodies in the event of a fall.

***Procedure* (con't)**

8) Components

a) *Atlantic Roofer Limited* and North Shore Roofing employees must follow the hazard assessment and fall protection planning process prior to selection of either the fall protection system type or accessory components. Should *Atlantic Roofer Limited's* COP and accessory procedures such as maintenance, inspection and disposal be more defined in their application than their vendors or clients, the *Atlantic Roofers Limited's* will take precedence.

b) Components of any active fall protection system will always include the following:

i) Anchors or anchorage system
ii) Connecting components
iii) A body holding device
iv) A fall protection plan

c) **Anchors**

i) Anchors are the foundation of any active fall protection system. Workers must be able to recognize what can be used as an anchor or anchorage point of attachment. Presently in Canada, there is no CSA guideline on anchors or anchorages. However there is an American National Standards Institute (ANSI 359.1) guideline which industry presently relies on.

ii) While the ideal anchor strength is 22 kN (5000 lbs) per attached worker, determining that a given point has the capability sought remains a subjective decision. If designated and marked anchor points are not available, workers must have enough training to properly select safe anchor points. OH&S regulations generally detail varying anchor strength requirements that must be adhered to if at all possible.

d) **Lanyards and Shock Absorbers/Energy Absorbers**

i) Lanyards are a means of connecting components used to connect the worker via the full body harness to the anchorage point. Shock absorbers are designed to absorb the forces when a fall occurs. Not every system type will require the addition of a shock absorber but, where possible, *Atlantis Roofers Limited* employees should use systems that include them. Manufacturers' provide various types, length and varieties of lanyards and shock absorbers. The decision to use one type or combination over other types will be dictated by availability as well as system type and requirements.

ii) All lanyards and shock absorbers must be Canadian Standards Association (CSA) approved and bear marking that indicates the relevant standard. Their selection will be based on the work environment and the type of work being conducted. The following is a list of the different lanyard and shock absorber types:

a) Fibre-rope lanyards with and without shock absorbers
b) Wire rope lanyards with and without shock absorbers
c) Web lanyards with and without shock absorbers
d) Shock absorbing lanyards
e) Twin lanyards with permanently attached shock absorbers

e) **Descent Control Devices**

i) Descent control devices allow a worker to be lowered or to move down a rope in a controlled fashion. These devices provide either automatic or manual controlled descent and are normally used for evacuation. All descent control devices must be Canadian Standards Association (CSA) approved and bear marking that indicates the relevant standard. The selection will be based on the work environment and the type of work being conducted. The following is a list of descent controllers types:

a) Automatic descent control for emergency purposes
b) Manual descent with automatic lock-off for emergency egress

***Procedure* (con't)**

8) Components (con't)

f) **Self-Retracting Devices**

i) Since self-retracting devices lock-up almost immediately, these devices greatly reduce free fall distances and the consequent forces applied to our bodies in the event of a fall. Their primary application is for vertical system use; however different manufacturer's do permit them to be used in horizontal applications. All self-retracting devices must be Canadian Standards Association (CSA) approved and bear marking that indicates the relevant standard. The selection will be based on the work environment and the type of work being conducted. The following is a list of self-retracting devices:

a) **Type 1:** Usually shorter in length, 1.5 - 3.0 metres (5 -10 ft). These must be removed immediately from service after a fall.

b) **Type 2:** For use over 3 metres (10 ft), These must be removed from service and returned to the manufacturer for repair after a fall if the visual load indicator is deployed.

c) **Type 3:** These devices have a built in retrieval capability and must also be removed from service and returned to the manufacturer for repair after a fall if the visual load indicator is deployed.

g) **Fall Arresters (Rope or Cable Grabs)**

i) Fall arresters are devices that can be moved along a rope, cable or rail and that lock (grab) in the event of a fall. Some arresters are entirely automatic while others are manually controlled. All arresters are predominantly designed to be used in vertical systems.

ii) Their primary application is for vertical system use; however, different manufacturer's do permit them to be used in horizontal applications. All fall arresters (Rope Grabs) must be Canadian Standards Association (CSA) approved and bear markings that indicate the relevant standard. The selection will be based on the work environment and the type of work being conducted. The following is a list of fall arrester types:

a) **Class AD:** Automatic Dorsal, rear attachment, moves automatically.

b) **Class AS:** Automatic Sternal, frontal attachment, moves automatically.

c) **Class ADP:** Automatic Dorsal panic, rear attachment, arrests even when grabbed in a panic-like situation.

d) **Class MDP:** Manual Dorsal Panic, rear attachment, must be deliberately moved along the lifeline.

h) **Full Body Harness (body holding device)**

i) *Atlantic Roofer Limited*'s employees are responsible for determining the type of personal fall protection harness required. All harnesses must be Canadian Standards Association (CSA) approved and bear marking that indicates this clearly relevant standard. The selection will be based on the work environment and the type of work being conducted. The following is a list of harness types typically used:

a) **Fall Arresting** Single D-ring located on the upper spine between shoulder blades. (CSA Type "A")

b) **Ladder Climbing** Additional D-rings on the front of the harness allowing for attachment to ladder system. (CSA Type "L")

9) Hazard Assessment Process

a) Pre-work hazard assessments are required by regulatory bodies and *Atlantic Roofers Limited* safety standards. Workers must conduct hazard assessments to identify existing or potential hazards before starting work on any *Atlantic Roofers Limited* worksite.

***Procedure* (con't)**

9) Hazard Assessment Process (con't)

b) A thorough and documented worksite hazard assessment must be completed where working at heights is required. All workers should be involved in the assessment process whenever possible. Once this hazard assessment is complete then appropriate controls must be employed, chosen on the merit of their effectiveness, to eliminate or control the hazard(s) identified. These controls are commonly referred to as the hierarchy of hazard control, meaning there is a best or first choice as well as a last resort choice. The following list gives control methods in order of preference.

i) **Engineering:** These controls change the environment to reduce or eliminate the hazard.

ii) **Administrative:** These controls communicate hazards and/or change the way in which the work is performed.

iii) **Personal Protective Equipment (PPE):** These controls apply changes to the worker, but do nothing to reduce the hazard.

iv) Active fall protection systems (PPE) are systems that are used as a last resort when engineering controls are not viable or practicable.

10) Fall Protection Planning

a) Fall protection planning starts with competent training. Workers must be adequately qualified and informed as to the fall protection systems and components available to them when working at heights. Competent training, including the use of a comprehensive approach to system and component selection, will ensure that all *Atlantic Roofer Limited* personnel complete a fall protection plan prior to the start of any work where the uses of fall protection systems and/or components are required. When having to use fall protection systems in a working alone environment, the fall protection planning must ensure that another worker is on site to perform a rescue if required, before the work activities are started. The components within the fall protection plan must include, at a minimum, the following items:

i) Hazard Identification

ii) Fall Protection System

iii) Fall Protection Components

iv) Rescue/Response Plan

* Refer to **"Fall Protection Plan Form" – Form "F-02-2"**

11) General Rescue Procedures

a) In the event of an injury, or in the event that an employee performing works at heights greater than 3 metres requires assistance, the following emergency rescue procedures will be used:

i) Have someone notify emergency rescue personnel immediately **BY DIALING 911 OR OTHER EMERGENCY NUMBER DESIGNATED AT THE FACILITY.**

ii) Commence rescue activities by choosing the most suitable of the following methods:

(a) Self-Rescue

(b) Assisted Self-Rescue

(c) Mechanically Aided Rescue

(d) Rescue Pick-off

iii) After rescue is affected, move the employee away from the space, and administer First Aid / CPR, as appropriate and wait for Emergency Services.

Note: Specific rescue procedures may have to be developed for each activity or task requiring the use of fall protection systems.

Yves Bradet, General Manager
Atlantic Roofers Limited

Jan 14/19
Date

Terry Casey, General Manager
North Shore Roofing Ltd.

Jan 14/19
Date

General

Where there is a potential fall hazard, work must be carried out without undue risk to the worker.

Hazards Present

- Serious Injury
- Death

Protective Mechanisms

- PPE
- Manufacturers Recommendations
- Training/Supervision

Equipment / Tools Required

- Full Body Harness
- Anchor Point that can withstand 5000 lbs.
- Energy Absorbing Lanyard/ Self-Retracting Lanyard
- Labels

Do

- DO ensure that fall protection plans are site specific and address the type of equipment used at the workplace
- DO inspect all equipment before each use
- Do remove from service if used in a fall
- DO read and understand manufacturer's instructions
- DO ensure anchorage points are rigid
- DO use caution around moving machinery, electrical hazards, chemical hazards and sharp edges
- DO have a rescue plan and the ability to implement a rescue. Training should be provided on a periodic basis

Do Not

- DO NOT alter or intentionally misuse equipment
- DO NOT use if subjected to fall arrest forces
- DO NOT install or use if you have not been trained in its correct application and use
- DO NOT use if there is a reason to doubt your fitness to absorb the impact from a fall arrest
- DO NOT store in direct sunlight. Avoid areas where chemical vapors are present
- DO NOT use non-locking connectors with this system

Procedure

1) **Identification of Fall Hazards**
   a) Workers must determine if he/she will be exposed to the hazard of falling from an unguarded work area that is;
      v) 3 meters (10 ft.) or more above water or the nearest safe level.
      vi) Above any surface or object that could cause injury to the employee upon contact.
      vii) Above any open top tank, bin, hopper or vat.

2) **Hazard Assessment**
   a) Following the Job Procedure for Hazard Assessment, inspect the worksite areas for possible fall hazards.
   b) Record each hazard on the appropriate Hazard Assessment Form
   c) Rate the hazards for their severity levels.
   d) Choose the appropriate method of Fall Protection to eliminate the chance of a fall.
   e) Have an initial site meeting prior to employees performing any site work to make known and discuss hazards, controls in place and rescue plan in the event of a fall.

***Procedure* (con't)**

3) Rescue Plan

a) Formulate a rescue plan for the type of situation, work area access, hazards involved.
b) Record Rescue Plan on appropriate Form.
c) Discuss Rescue Plan with all site employees and keep in a prominent place to be available at all times.
d) Where possible, the fallen worker can self-rescue.
e) Call 911, the local fire department, emergency response services and respective supervisor.
f) Advise the suspended worker to lift their knees into a sitting position.
g) Suspension relief straps may be used to take weight off the harness to relieve stress on the worker's body.
h) Do not allow the rescued worker to lie down in a horizontal position.
i) First aid attendant should administer on-site first aid as required.
j) The fallen worker should seek appropriate medical attention.

4) Fall arrest System

a) Guardrails shall be used for fall protection whenever practicable.
b) Use of travel restraints or fall arrest equipment shall be used when guardrails cannot provide sufficient protection.
c) Determine and assemble the necessary components
d) Ensure that the harness is adjusted to fit properly and is rated for your weight.
e) A full body harness and an Energy Absorbing Lanyard OR Self-Retracting Lanyard must be secured to an anchorage point.
f) *Atlantic Roofers Limited/North Shore Roofing employees must adhere to client fall protection requirements if they exceed the legislated standard. If a guardrail system is not available, a fall arrest or travel restraint system must be used. The standard height at which fall protection is required in Canada is 10 ft (3 m). However, some clients follow the more stringent US OSHA standard. In the Construction Industry, employees must use fall protection on a walking or working surface with an unprotected side/edge which is 6 ft (1.8 m) or more above a lower level (OSHA 1926.501b). In General Industry, fall protection for wall openings and holes must be used at a height of 4 ft (1.2 m) (OSHA 1910.23b).*

5) Determine Anchor Point

a) Consider all possible paths of user movement and all factors that could affect the user's safety <u>before</u>, <u>during</u> and <u>after</u> a fall.
b) Select anchorages that are stable and have the strength required (5000 lbs.)
c) Carefully select the locations of the anchorages to:
    v) Reduce possible free fall distance
    vi) Prevent swing fall hazards
    vii) Provide clear space in the potential fall paths to avoid striking an object
d) Do not select anchorage locations that will require the user to work above the anchor as this will increase the potential free fall and total fall distance.
e) Potential free fall distances must not exceed 1.8 m (6 ft.).

6) Calculate Fall Distance (See Figure 1)

a) Calculate the total fall distance and ensure that an adequate clearance distance is available.
b) When fall clearance is under 5.6 m (18 ½ ft.), an alternative solution such as a shorter lanyard length, or a different connecting device such as a self-retracting lanyard or fall limiter, is needed to reduce the total fall distance.

Note: Never tie a knot in a lanyard to make it shorter, as it reduces the strength by 50%. Instead, use an adjustable lanyard and adjust it to proper working length

Procedure (con't)

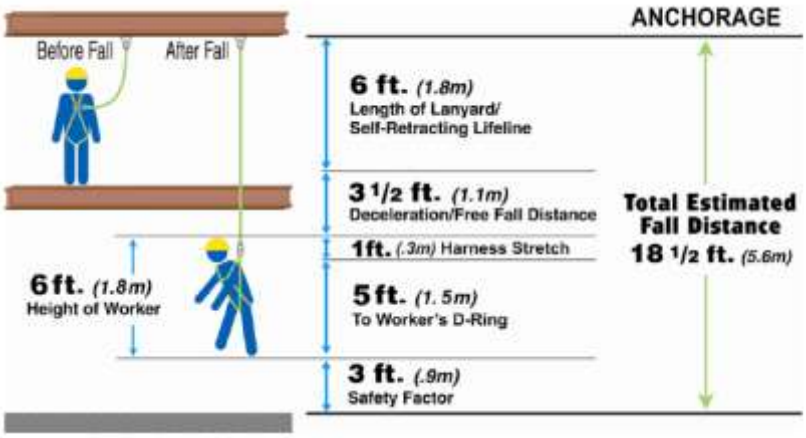

Figure 1
Typical calculation using a 6 ft lanyard

1) **Swing Falls (Figure 2)**
   a) Minimize swing falls by working as directly below the anchorage point as possible.
   b) Make certain that enough clearance is available in all potential fall paths to prevent striking an object.

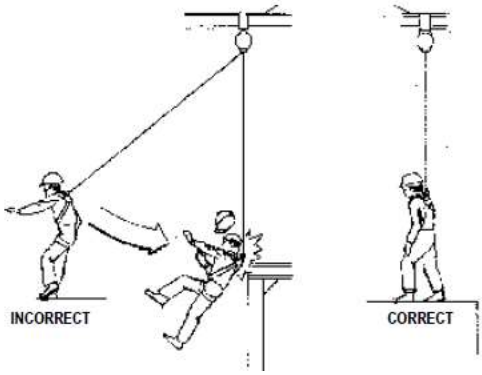

Figure 2

2) **Inspection**
   a) All components must be visually inspected before each use.
   b) See Job Procedure *"Fall Protection – Inspection of Equipment".*
   c) Remove from service if equipment has been used in a fall.
   d) Defective components are not to be used.

3) **Maintenance & Storage**
   a) Wipe off all surface dirt with a sponge and a solution of water and mild soap.
   b) Rinse the webbing in clean water, dry with a cloth and hang to dry.
   c) Store equipment in a clean, dry area that is free of fumes, excessive heat and direct sunlight.

REFERENCES:
Form F-02-2 Fall Protection Plan

Please contact Safety Coordinator @ 506-576-6683, if you have any questions regarding what is expected for the procedure or for clarification

The information contained in this publication is intended for general use and may not apply to every circumstance. It is not a definitive guide to government legislation and does not relieve persons using this publication from their responsibilities under the Workplace Safety and Health Act or applicable legislation.
The appropriate regulations and statutes should always be consulted and adhered to. Atlantic Roofers Limited/North Shore Roofing Ltd. and its affiliates do not guarantee the accuracy of, nor assume liability for the information presented here.

General

Where there is a potential fall hazard, work must be carried out without undue risk to the worker.

Hazards Present

• Serious Injury	• Death

Protective Mechanisms

• PPE	• Manufacturers Recommendations	• Training/Supervision

Equipment / Tools Required

• Full Body Harness	• Energy Absorbing Lanyard/ Self-Retracting Lanyard	• Labels
• Roof Post	• 16 - 45lb Plates	• Base & D Ring

Do ✓

- DO ensure that fall protection plans are site specific and address the type of equipment used at the workplace
- DO inspect all equipment before each use
- Do remove from service if used in a fall
- DO read and understand manufacturer's instructions
- DO ensure anchorage points are rigid
- DO use caution around moving machinery, electrical hazards, chemical hazards and sharp edges
- DO have a rescue plan and the ability to implement a rescue. Training should be provided on a periodic basis

Do Not ✗

- DO NOT alter or intentionally misuse equipment
- DO NOT use if subjected to fall arrest forces
- DO NOT install or use if you have not been trained in its correct application and use
- DO NOT use if there is a reason to doubt your fitness to absorb the impact from a fall arrest
- DO NOT store in direct sunlight. Avoid areas where chemical vapors are present
- DO NOT use non-locking connectors with this system

Procedure

1) **Conduct a pre-starting inspection of equipment and work area**
   a) Check each component for defective or missing parts.
   b) Inspect the roof area for trip hazards, openings, electrical hazards, etc.
   c) Guardrail System shall be secured around any roof openings or hazards.

2) **Hoist the Weighted Anchor System to Roof**
   a) This system is designed to break down into component parts allowing one person to take the system up to the roof in an elevator and assemble it on the roof. OR
   b) Check the roof and deck for deterioration before allowing personnel or equipment access to the roof. Make certain the roof and structure is strong enough to support the weight.
   c) Identify appropriate setup area on the roof.

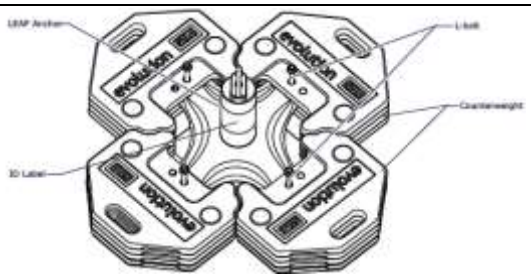

***Procedure* (con't)**

2) Hoist the Weighted Anchor System to Roof (con't)

d) Make sure everyone on the ground is completely clear of the hoisting area.

e) Ensure appropriate number of personnel are available for the task.

f) Consult your "Hoisting" Job Procedure for complete hoisting procedures before proceeding to crane or hoist the guardrail system.

3) LIMITATIONS: The following limits apply to the installation and use of Evolution Counterweight System. Other limitations may apply:

a) **HORIZONTAL LIFELINE:** The Evolution Counterweight System is not rated for use as an anchor for a horizontal lifeline.

b) **SYSTEM CAPACITY:** The maximum capacity of the Evolution Counterweight System is one person with a maximum combined weight including tools and clothing, of 310 lbs. (141 kg).

c) **ROOF TYPES:** The Evolution Counterweight System is approved for use on the following types of roofs: concrete, single ply membrane, bitumen membrane, asphalt sanded, and asphalt stone chippings. If you want to use the system on any other type of roofing surface, contact DBI-SALA for further recommendations.

d) **ROOF LOAD:** The roof must be able to support a static load of 720 lbs.

e) **STRUCTURE LOAD:** The structure supporting these anchorage points must be rigid, flat pitch, and capable of supporting at least 5,000 lbs. (22.2 kN) in the direction of potential fall arrest.

f) **ROOF CONDITIONS:** The Evolution Counterweight Anchor System must not be used in adverse weather conditions. The roof surface must be free of frost, snow, standing water, grease or oil, or any other type of lubricating or friction reducing materials.

g) **ENVIRONMENTAL HAZARDS:** Use of this equipment in areas where environmental hazards exist may require additional precautions be taken to reduce the possibility of injury to the user or damage to the equipment. Hazards may include, but are not limited to: high heat, extreme cold, caustic chemicals, corrosive environments, high voltage power lines, explosive or toxic gases, moving machinery, or sharp edges. Contact DBI-SALA if you have questions about using this equipment where environmental hazards exist.

4) Making Connections

a) Only use self-locking snap hooks and carabiners with this equipment. Only use connectors that are suitable to each application. Ensure all connections are compatible in size, shape and strength. Do not use equipment that is not compatible. Ensure all connectors are fully closed and locked.

5) Before Use

a) *Do not alter or intentionally misuse this equipment. Consult with DBI-SALA if using this equipment in combination with components or subsystems other than those described in this manual. Some subsystems and components combinations may interfere with the proper operation of this equipment. Use caution when using this equipment around moving machinery, electrical and chemical hazards, and sharp edges.*

b) **BEFORE EACH USE** inspect this equipment according to steps listed in section 5.3. Do not use this equipment if inspection reveals an unsafe or defective condition.

c) Read and understand all manufacturer's instructions for each component of the personal fall arrest system.

d) **OTHER CONSIDERATIONS:**

i. Place the Counterweight System at least 8 ft (2.5 m) away from any edge or opening.

ii. Personal fall arrest systems must be rigged to limit any free fall to a maximum of 6 ft. (1.8 m)

iii. Avoid working above your anchorage level since an increased free fall distance will result.

iv. Avoid working where your line may cross or tangle with that of another worker or another object.

v. Do not allow the lifeline to pass under arms or between legs.

vi. Never clamp, knot or otherwise prevent the lifeline from retracting or being taut, avoid slack line.

***Procedure** (con't)*

5) Before Use (con't)

e) Swing falls occur when the anchorage point is not directly above the point where a fall occurs. The force of striking an object while swinging (horizontal speed of the user due to the pendulum affect) can be great and may cause serious injury. Swing falls can be minimized by working as close to the anchorage point as possible. In a swing fall situation, the total vertical fall distance of the user will be greater than if the user had fallen vertically directly below the anchorage point. The user must therefore account for an increase in the total free fall distance and the area needed to safely arrest the fall. See Figure 1.

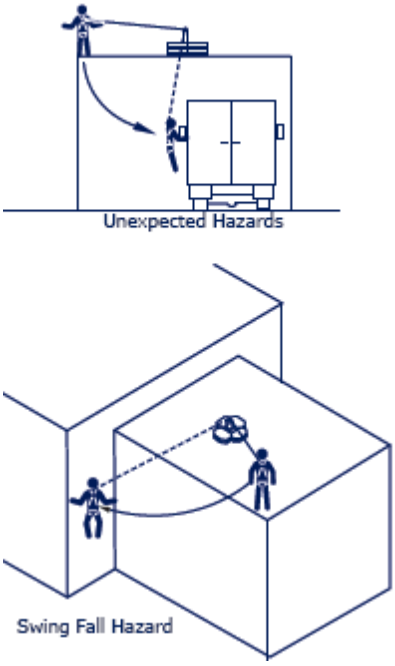

Figure 1

6) System Assembly

a) Sweep the installation area free of loose materials, then layout four rubberized plates on a flat surface. See Figure 2.

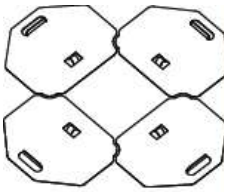

Figure 2

b) Insert the "L" Bolts into the raised slots (see Figure 7). Alternate the direction of each L-bolt. See Figure 3.

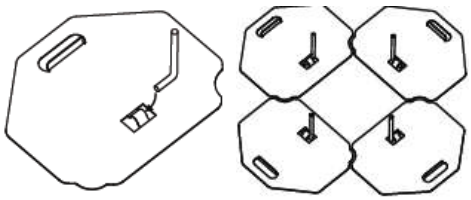

Figure 3

c) Install the LEAP Anchor to ensure the L-bolts are oriented correctly and the D-ring on the LEAP Anchor will face the desired direction when installation is complete. See Figure 4.

d) Remove the LEAP Anchor and begin to assemble the counterweights onto the base plates, with the L-bolt protruding through the matching hole.
For concrete, single-ply membrane, and bitumen membrane, stack three counterweights on each base plate. For asphalt sanded and asphalt stone chippings, stack four counterweights on each base plate. See Figure 5.

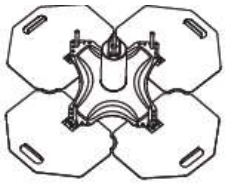

Figure 4

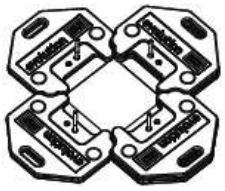

Figure 5

e) Assemble the LEAP Anchor onto the L-bolts and counterweights. Make sure each bolt passes through one of the 1/2 in. diameter mounting holes in the base plate of the LEAP Anchor. See Figure 6.

f) Assemble one more layer of counterweights over the LEAP Anchor base, then apply a washer and nut to each of the L-bolts. Hand tighten all four nuts snugly. See Figure 7.

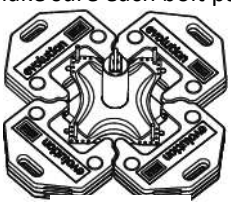

Figure 6

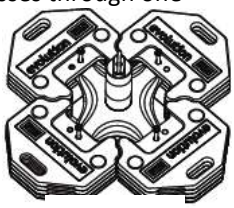

Figure 7

Procedure (con't)

9) Connecting to the Leap Anchor

a) Figure 8 illustrates the proper connection of typical fall arrest equipment to the LEAP anchor. Always protect the lifeline from abrading against sharp or abrasive surfaces on the roof. Make sure all the connections are compatible in size, shape and strength.

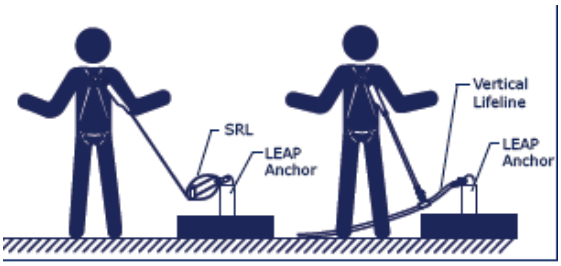

Figure 8

b) Never connect more than one personal protective system to any single LEAP anchor at a time.

c) **SRL:** Connection to the installed LEAP anchor may be made by attaching the self locking snap hook at the end of the SRL lifeline to the back dorsal D-ring (fall arrest attachment point) of the user's body support (i.e. full body harness). When connecting, make sure the connections are fully closed and locked.

10) Training

a) It is the responsibility of all users of this equipment to understand these instructions, and are trained in the correct installation, use, and maintenance of this equipment. These individuals must be aware of the consequences of improper installation or use of this equipment.

11) Inspection

a) **BEFORE EACH INSTALLATION:** Inspect the counterweight components, and other system components according to these or other manufacturer's instructions. System components must be formally inspected by a qualified person (other than the user) at least annually. Formal inspections should concentrate on visible signs of deterioration or damage to the system components. Items found to be defective must be replaced. Do not use components if inspection reveals an unsafe or defective condition.

i. Check the base plates for excessive dents or deformations. Make sure the counterweights will lay flat on the base plates. Check the base plates for delamination of the rubber coating. If the coating has loose edges that may catch or double back on itself, the base plate should be replaced.

ii. Inspect the LEAP Anchor for physical damage. Look carefully for any signs of cracks, dents or deformities in the metal. If the anchor has been subjected to fall arrest forces the upright cylinder will be tipped over to one side. Do not use an anchor that has been subjected to fall arrest forces.

iii. Inspect the LEAP Anchor for signs of excessive corrosion.

iv. Ensure the condition of the roof will support the LEAP Anchor loads.

v. If inspection reveals an unsafe or defective condition, remove the unit from service and destroy, or contact DBI-SALA for possible repair.

12) Maintenance, Service, Storage

a) The Evolution Counterweight System components require no scheduled maintenance, other than repair or replacement of items found defective during inspection. See section 5.0. If components become heavily soiled with grease, paint, or other substances, clean with appropriate cleaning solutions. Do not use caustic chemicals that could damage system components.

b) The following label must be present and fully legible:

Please contact Safety Coordinator @ 506-576-6683, if you have any questions regarding what is expected for the procedure or for clarification

The information contained in this publication is intended for general use and may not apply to every circumstance. It is not a definitive guide to government legislation and does not relieve persons using this publication from their responsibilities under the Workplace Safety and Health Act or applicable legislation.
The appropriate regulations and statutes should always be consulted and adhered to. Atlantic Roofers Limited/North Shore Roofing Ltd. and its affiliates do not guarantee the accuracy of, nor assume liability for the information presented here.

Fall Protection – Pre-Engineered Horizontal Lifeline Use

JP # 15

General

Horizontal Lifeline Systems, also known as HLL systems, are utilized in many of the fall arrest and fall restraint systems given great utility and flexibility. Horizontal lifeline systems are common in work areas lacking overhead anchor points available for personnel tie–off. The *fall restraint* and *fall arrest* properties of horizontal lifelines make the HLL an integral part of many fall protection systems.

Purpose

- Fall (Travel) Restraint
- Fall Arrest

Hazards Present

- Serious Injury
- Death

Protective Mechanisms

- PPE
- Manufacturers Recommendations
- Training/Supervision

Equipment / Tools Required

- Tie-off Adapter
- Attachment O Ring (for user lanyard)
- Full Body Harness
- In-line Energy Absorber
- Labels
- Energy Absorbing Lanyard/ Self-Retracting Lanyard
- Rope Tensioner
- Snap Hook
- Portable Anchor (if required)

Do

- DO ensure that fall protection plans are site specific and address the type of equipment used at the workplace
- DO inspect all equipment before each use
- DO remove from service if used in a fall
- DO read and understand manufacturer's instructions
- DO ensure anchorage points are rigid
- DO use caution around moving machinery, electrical hazards, chemical hazards and sharp edges
- DO have a rescue plan and the ability to implement a rescue. Training should be provided on a periodic basis

Do Not

- DO NOT alter or intentionally misuse equipment
- DO NOT use if subjected to fall arrest forces
- DO NOT install or use if you have not been trained in its correct application and use
- DO NOT use if there is a reason to doubt your fitness to absorb the impact from a fall arrest
- DO NOT store in direct sunlight. Avoid areas where chemical vapors are present
- DO NOT use non-locking connectors with this system

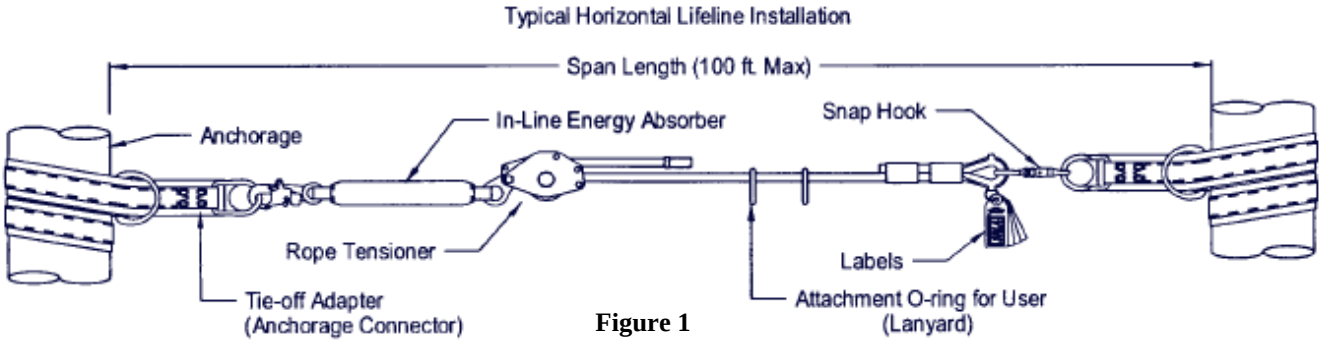

Figure 1

Equipment Requirements

1. **System Connectors**
   a. Connectors used to attach to the attachment O-ring on the horizontal lifeline (hooks, carabiners, D-rings) must support at least 2268 Kg (5,000 lbs.)
   b. Connectors and attachment elements must be compatible in size, shape, and strength. Non-compatible connectors may unintentionally disengage (roll-out).
   c. Do not use non-locking connectors with this system.

2. **Anchorage Connectors**
   a. Connectors used to attach the horizontal lifeline to end anchors must be compatible with the connection point.
   b. The connection, with connecting elements, must be capable of sustaining a 2268 Kg (5,000 lbs.) load without failure.

3. **Structure Load**
   a. Structural anchorage points must be rigid, and capable of supporting at least 1633 Kg (3,600 lbs.) along the axis of the horizontal lifeline.

4. **Connecting Subsystem**
   a. The connecting subsystem is the portion of the personal fall arrest system that connects the horizontal lifeline subsystem and harness fall arrest attachment element.
   b. The connecting subsystem must limit forces applied to the horizontal lifeline to 408 Kg (900 lbs.) or less.

Limitations

5. **Horizontal Lifeline Span (Pre-Engineered)**
   a. The maximum span distance is 30 meters (100 feet).
   b. The span length must be reduced when clearance is limited

6. **System Capacity**
   c. The maximum capacity of the pre-engineered horizontal lifeline is two (2) persons. The maximum weight of each person, including tools and clothing is 141 Kg (310 lbs).

7. **Free Fall** (Figure 2)
   d. Rig and use the personal fall arrest system such that the maximum potential free fall does not exceed 1.8 meters (6 feet)

8. **Swing Down / Swing Back** (Figure 3 & 4)
   e. Swing downs occur if the lanyard slides back along the perimeter edge of the roof until it is vertical. When this happens, the person may hit the ground, or the lanyard may break as a result of its contact with the edge of the roof

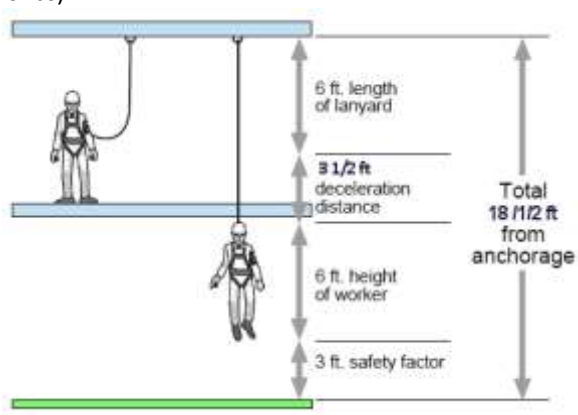

Figure 2

Limitations (con't)

8. Swing Down/Swing Back (con't)

b. Measures to address "swing down" include:

i. The installation of guard rails

ii. Placing the anchorage point at a right angle to the position of the lanyard at the perimeter edge (for example, by using a mobile anchorage).

iii. The installation of a second anchorage point and belay devices (intermediate anchorages).

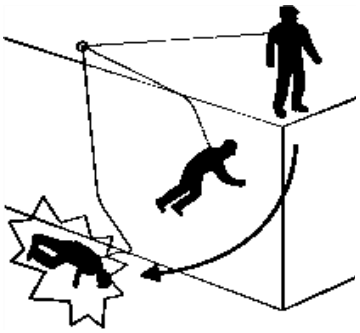

Figure 3

During "swing down" the length of the lanyard and positioning of the anchor allow contact with the ground.

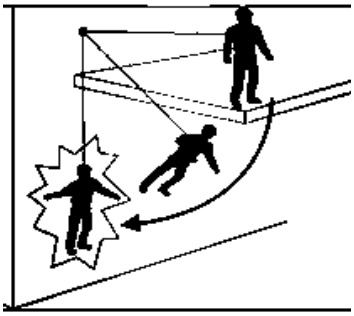

Figure 4

During "swing back" the length of the lanyard and positioning of the anchor contact may allow the worker to hit the structure.

9. Body Support

a. A full body harness must be used.

Procedure for Use

10. Before Each Use

a. Inspect all equipment.

b. Do not use equipment if inspection reveals an unsafe or defective condition.

c. Read and understand manufacturer's instructions for all components.

11. System Installation

d. Figure 1 shows a typical horizontal lifeline installation.

e. When using an ***energy absorbing*** lanyard to connect to the system:

i. The end anchorages must be located at a height which will limit the free fall to 1.8 meters (6 feet).

f. When using a ***self-retracting lifeline (SRL)*** to connect to the system:

i. The end anchorages must be located above the user.

ii. The SRL, when fully retracted, must be above the harness attachment level.

g. The horizontal lifeline should be positioned at a level that will minimize free fall while allowing ease of use.

h. The horizontal lifeline should be positioned near the work location to minimize swing-down hazards.

i. The connecting subsystem length should be kept as short as possible to reduce the potential free fall and required clearance distance.

j. Both anchorages must be installed at approximately the same height, so that the horizontal lifeline is not sloped more than 5 degrees

Procedure for Use (con't)

11. System Installation (con't)

g. Both anchorages must be installed at approximately the same height, so that the horizontal lifeline is not sloped more than 5 degrees.

12. Determine location of end anchorages

a. Determine the span length

b. Evaluate the required clearance

13. Install the anchorage connectors

a. To ensure the tie-off adaptor does not slide down a vertical or sloped anchorage, the tie-off adaptor must be wrapped twice around the structure.

14. Secure the Horizontal Lifeline

a. Secure each end of the Horizontal Lifeline (HLL) to the anchorage connectors with the snap hook or carabiner.

b. Loosen and reposition the rope tensioner as required.

15. Remove Slack from HLL (Figure 5)

a. Pull the rope through the tensioner by hand.

b. To tension the HLL, using a pointed bar or a 1 1/8" wrench, turn tensioning nut clockwise until tensioning is no longer possible.

c. Do not modify the rope tensioner to achieve greater lifeline tension.

d. The final tension will be 136 to 204 Kg (300 to 450 lbs).

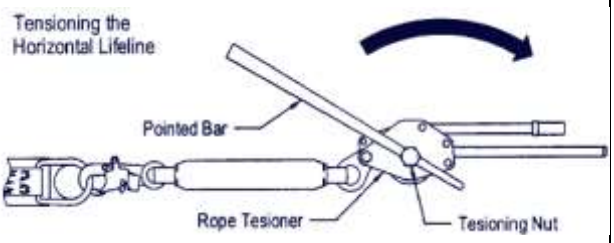

Figure 5

16. Connecting to the HLL System

a. Inspect and put on your full body harness.

b. Attach the lanyard to the back D ring (dorsal connection) on the harness.

c. Approach the work area using the appropriate access equipment.

d. Connect the free end of your lanyard one of the attachment O rings on the horizontal lifeline.

System Removal

17. Release Tension on the HLL (Figure 6)

a. Lift the locking lever and position the pointed bar under the locking device.

b. Push the pointed bar in an upward motion to unlock the lever.

c. Loosen the tensioning nut by inserting the pointed bar through the hole in the nut (or use a 1 1/8" wrench) and turn the tensioning nut counter clockwise.

d. Remove all knots and kinks in the rope before storage.

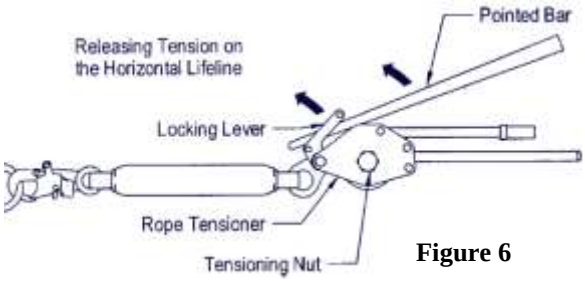

Figure 6

REFERENCES:
Form F-02-2 Fall Protection Plan

Please contact Safety Coordinator @ 506-576-6683, if you have any questions regarding what is expected for the procedure or for clarification

The information contained in this publication is intended for general use and may not apply to every circumstance. It is not a definitive guide to government legislation and does not relieve persons using this publication from their responsibilities under the Workplace Safety and Health Act or applicable legislation.
The appropriate regulations and statutes should always be consulted and adhered to. Atlantic Roofers Limited/North Shore Roofing Ltd. and its affiliates do not guarantee the accuracy of, nor assume liability for the information presented here.

General

Where there is a potential fall hazard, work must be carried out without undue risk to the worker.

Hazards Present

- Serious Injury
- Death

Protective Mechanisms

- PPE
- Manufacturers Recommendations
- Training/Supervision

Equipment / Tools Required

- Crane and/or Hoist
- Railguard 200 Rail Sections
- Rigging Equipment
- Railguard 200 Base Plates c/w Lockpins
- Warning Signs/Tape or Barricades
- Two Wheel Transport Buggy

Do

- DO ensure that fall protection plans are site specific and address the type of equipment used at the workplace
- DO inspect all equipment before each use
- Do remove from service if defects are found
- DO read and understand manufacturer's instructions
- DO ensure you tie off when installing the guardrails
- DO use caution around moving machinery, electrical hazards and chemical hazards
- DO have a rescue plan and the ability to implement a rescue. Training should be provided on a periodic basis

Do Not

- DO NOT alter or intentionally misuse equipment
- DO NOT use if defects are found
- DO NOT install or use if you have not been trained in its correct application and use
- DO NOT use weighted bases within 6 feet along the edge of roof if roof surface is slippery.

Procedure

1) **Conduct a pre-starting inspection of equipment and work area**
   a) Check each component for defective or missing parts.
   b) Inspect the roof area for trip hazards, openings, electrical hazards, etc.
   c) All personnel on the roof shall use appropriate fall protection equipment until Guardrail System is securely in place.

2) **Hoist Rail System to Roof**
   a) Check the roof and deck for deterioration before allowing personnel or equipment access to the roof. Make certain the roof and structure is strong enough to support the weight.
   b) Identify appropriate laydown areas on the roof.
   c) Make sure everyone on the ground is completely clear of the hoisting area.
   d) Ensure appropriate number of personnel are available for the task.
   e) Consult your "Hoisting" Job Procedure for complete hoisting procedures before proceeding to crane or hoist the guardrail system.

***Procedure* (con't)**

3) Roof Preparation

a) Clean surfaces thoroughly by removing stones and debris where Base Plates will be located
b) Make sure roof surface is non-slippery.

4) Assemble Rail System on Roof (Figure 1)

a) Assemble Railguard System at least 1 meter (3 ft) from the edge of the roof or opening.
b) Position base plate and insert railing.
c) Insert locking pins. Make sure the clip is in the "Lock" position.
d) If required, insert optional steel speed boards and secure with pins. This would be used where there is a danger of falling materials onto someone below.
e) Use an "outrigger" section at any interruption in continuous railing sections. Outrigger assembly consists of a 1.52m (5 ft) railing with base plate pinned to railing and placed 90° away from danger side of continuous railing.
f) Using transporter buggy, lift base plates one-by-one and gradually move assembled rail sections into position at the edge of the roof or opening.
g) Ensure that no portion of the base plate extends beyond the safe work surface of the roof.

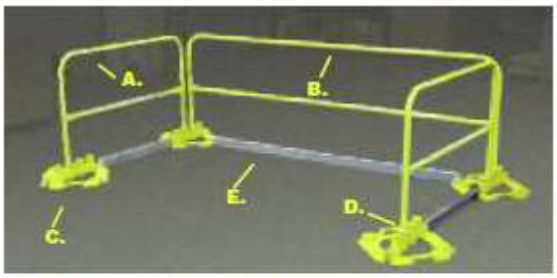

A. 5' Outrigger System (only used on very ends of run)
B. Danger Side Railings (use as many as required)
C. Extra Base Plate
D. Quick Pin
E. Optional 2" x 4" toeboards or Speed Boards

Figure 1

Procedure *(con't)*

5) Guard Rail and Clamp System

a) Refer to the following diagram to use the clamp system.

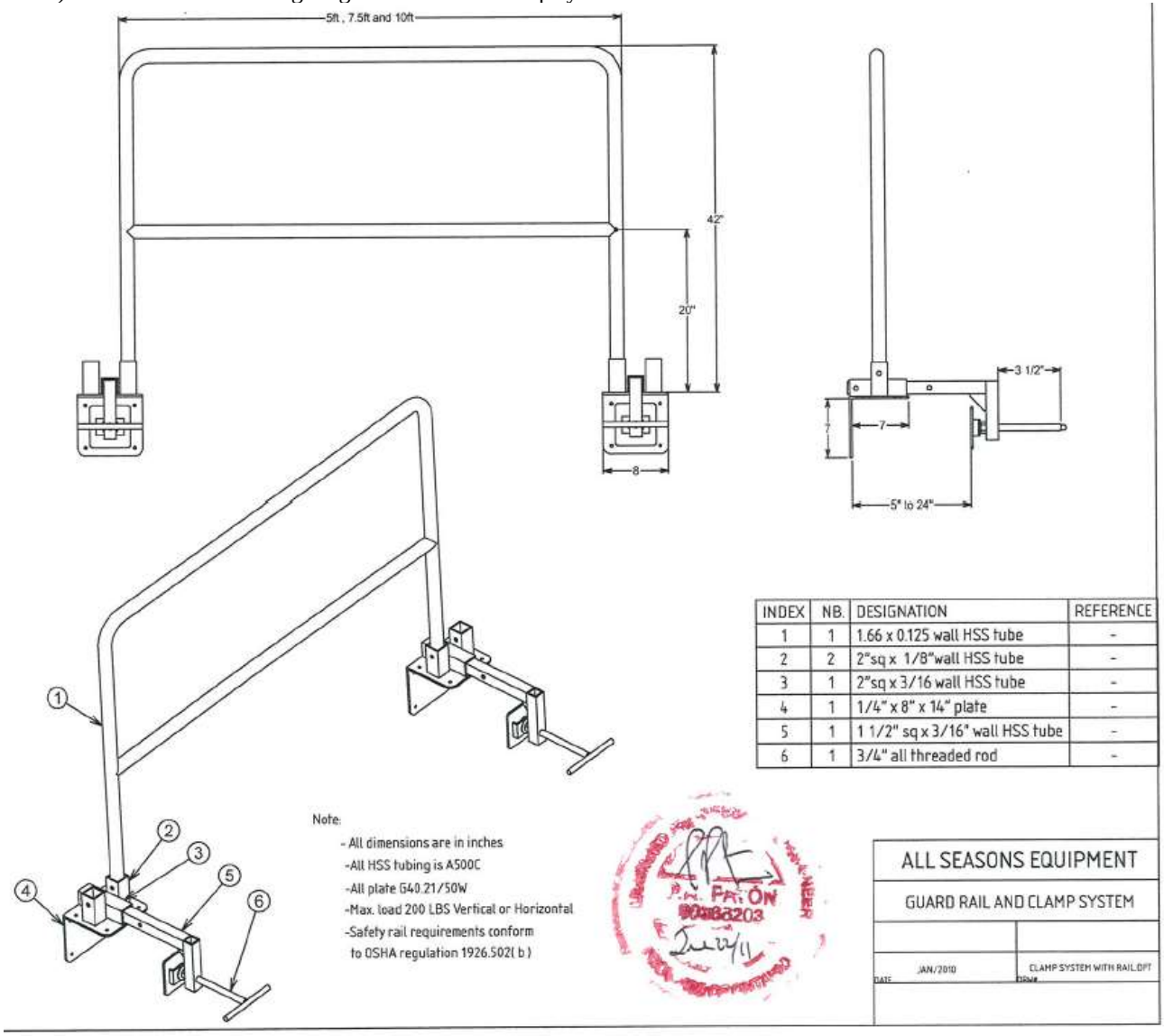

INDEX	NB.	DESIGNATION	REFERENCE
1	1	1.66 x 0.125 wall HSS tube	-
2	2	2"sq x 1/8"wall HSS tube	-
3	1	2"sq x 3/16 wall HSS tube	-
4	1	1/4" x 8" x 14" plate	-
5	1	1 1/2" sq x 3/16" wall HSS tube	-
6	1	3/4" all threaded rod	-

6) Disassembly of Railguard System

a) Reverse procedure to remove system.

7) Care and Maintenance

a) Touch-up, repair or replace damaged parts.

REFERENCES:

Form F-02-2 Fall Protection Plan

Please contact Safety Coordinator @ 506-576-6683, if you have any questions regarding what is expected for the procedure or for clarification

The information contained in this publication is intended for general use and may not apply to every circumstance. It is not a definitive guide to government legislation and does not relieve persons using this publication from their responsibilities under the Workplace Safety and Health Act or applicable legislation.
The appropriate regulations and statutes should always be consulted and adhered to. Atlantic Roofers Limited/North Shore Roofing Ltd. and its affiliates do not guarantee the accuracy of, nor assume liability for the information presented here.

General

Where there is a potential fall hazard, work must be carried out without undue risk to the worker. This process will restrict the exposure of workers to open edge hazards by utilizing a work positioning/motion stopping system to limit the travel radius of the attached worker.

Hazards Present

- Serious Injury
- Death

Protective Mechanisms

- PPE
- Manufacturers Recommendations
- Training/Supervision

Equipment / Tools Required

- Crane and/or Hoist
- Railguard 200 Rail Components
- Full Body Harness
- Rigging Equipment
- Fall Restraint Component Labels
- Energy Absorbing Lanyard/ Self-Retracting Lanyard
- Warning Signs/Tape or Barricades
- Two Wheel Transport Buggy
- 2" Opening Snap Hook

Do

- DO ensure that fall protection plans are site specific and address the type of equipment used at the workplace
- DO inspect all equipment before each use
- Do remove from service if defects are found
- DO read and understand manufacturer's instructions
- DO ensure you tie off when installing the guardrails
- DO use caution around moving machinery, electrical hazards and chemical hazards
- DO have a rescue plan and the ability to implement a rescue. Training should be provided on a periodic basis

Do Not

- DO NOT alter or intentionally misuse equipment
- DO NOT use if defects are found
- DO NOT install or use if you have not been trained in its correct application and use
- DO NOT use if subjected to fall arrest forces
- DO NOT store in direct sunlight. Avoid areas where chemical vapors are present
- DO NOT use non-locking connectors with this system

Procedure

Note: This system shall only be considered when other systems of fall protection are not available, impractical to use, or suitable anchorage is not readily accessible.

1) **Conduct a pre-starting inspection of equipment and work area**
   a) Check each component for defective or missing parts.
   b) Inspect the roof area for trip hazards, openings, electrical hazards, etc.
   c) All personnel on the roof shall use appropriate fall arrest equipment until Guardrail System is securely in place.

2) **Hoist Rail System to Roof**
   a) Refer to Job Procedure # 14 for full procedure on Rail Guard 200 Installation.

Procedure **(con't)**

3) Assemble Rail System on Roof

a) Refer to Job Procedure # 14 for full procedure on Rail Guard 200 Installation.

b) Calculate the distance the Rail system must be from the edge for the initial rigging of this positioning system to eliminate fall distance exposure without unduly restricting the user's ability to perform their work.

c) Measure the distance required from the edge and clearly mark the roof surface to identify the location of the base units on repositioning.

d) It is recommended that the rail sections be located a minimum of 5'/7' from the open edge. This would accommodate a 4'/6' lanyard.

e) The system must be appropriately positioned in consideration of the personal fall protection system components.

f) Working from the protected side of the Rail system, use a transporter cart to lift each base unit (one by one) and position them into the pre marked locations.

g) On completion ensure the distance to the edge is constant along any continuous runs of the Rail system by using a tape measure to confirm each rail section is the same distance from the edge.

h) The area established between the rail system and the open edge will hence be called the ***Controlled Access Zone (CAZ).***

4) Entering the CAZ (Controlled Access Zone)

a) There must be a **Safety Monitor** in which a trained worker is designated to monitor work activities in the control zone to ensure that work is done in a manner that minimizes the potential for a worker to fall.

b) Foreman will select **not more than 8 workers** that are to enter the CAZ.

c) Before entering, selected workers shall connect the lanyard to the dorsal ring of their harness and connect the 2" Snap Hook to the **middle horizontal rail** of the Railguard system. The 10' long middle rail was tested and found to be able to resist a force of 500 lbs. (HITE Engineering Corporation)

d) Selected workers will enter through the rail system or at an end. This point of entry must be more than 1 meter (3 ft) from the open edge.

5) Working in the CAZ (Controlled Access Zone)

a) Worker(s) shall maintain the lowest center of gravity possible to further reduce any additional strain on the rigged system. (Crouched down or on knees)

b) When the user reaches a point that is 1meter (3 ft) from the open edge they shall drop to a kneeling position and proceed in this manner to their working position.

c) The connecting lanyard must be taut and restrict the ability of the worker to fully access the fall hazard.

d) When fully extended in the system the worker should have "arms length" access to the open edge.

e) As the worker proceeds, on their knees, along the CAZ, the Lanyard should slide along the middle horizontal rail to allow the process to move without exposing the user to any swing fall hazards.

f) At each vertical post the user will follow this procedure:

   i. Maintain their low body center of gravity while moving backward to the rail system.

   ii. Maintain a grip on the top horizontal rail with one hand and use the free hand to shift the 2"snap hook from the horizontal middle rail on one rail section to the middle rail on next rail section.

g) This procedure shall be repeated at each vertical post intersection along the rail system.

6) Movement or Defects in the Railguard System

a) The foreman shall also check the rail system for sufficiency, and warn the worker(s) of any failures or hazards within the system.

b) A failure occurs when the system moves at any point toward the CAZ.

c) At any indication of a system failure work is to cease and workers are to retreat to the protected side of the rail system.

Procedure **(con't)**

7) Disassembling Rail System on Roof

a) Reverse steps 1 to 6.

8) Rescue Methods

a) In consideration of the assessment of the roof working surface as substantial and the intended use of a motion stopping system, the inevitability of a fall is not anticipated, however the removal of an injured person is considered and a procedure and communication issues will be addressed with Project management on a site to site basis.

b) Rescue /evacuation methods will be discussed with site workers prior to their commencement of work.

c) Professional Rescues teams (firefighters, municipal rescue teams, police) are the best resources and the availability of these services should be investigated in advance to confirm their ability to respond to a hazardous situation.

9) Investigations

a) All incidents involving a failure of this procedure/practice will be investigated.

b) The lead foreman shall complete a preliminary investigation report (PIR) and forward this report to the jurisdictional Branch Manager and the ARL Safety Coordinator within 24 hours of the incident.

c) A comprehensive investigation will be conducted by Atlantic Roofers Ltd. Safety Coordinator following receipt of the PIR.

REFERENCES:
Form F-02-2 Fall Protection Plan

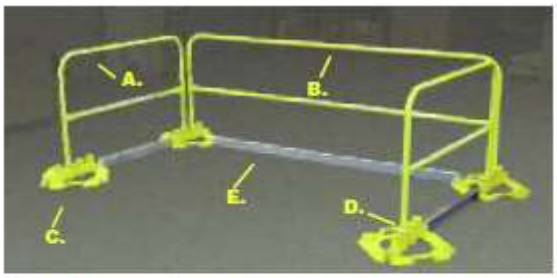

A. 5' Outrigger System (only used on very ends of run)
B. Danger Side Railings (use as many as required)
C. Extra Base Plate
D. Quick Pin
E. Optional 2" x 4" toeboards or Speed Boards

Please contact Safety Coordinator @ 506-576-6683, if you have any questions regarding what is expected for the procedure or for clarification

The information contained in this publication is intended for general use and may not apply to every circumstance. It is not a definitive guide to government legislation and does not relieve persons using this publication from their responsibilities under the Workplace Safety and Health Act or applicable legislation.
The appropriate regulations and statutes should always be consulted and adhered to. Atlantic Roofers Limited/North Shore Roofing Ltd. and its affiliates do not guarantee the accuracy of, nor assume liability for the information presented here.

General

Where there is a potential fall hazard, work must be carried out without undue risk to the worker. This system will allow employees to work safely and control falling debris. This system will give you a strong, stable working platform without interfering with the roofing work.

Hazards Present

- Serious Injury
- Death

Protective Mechanisms

- PPE
- Manufacturer's Instructions
- Training/Supervision

Equipment / Tools Required

- Crane and/or Hoist
- PR 2000 Components
- Full Body Harness
- Rigging Equipment
- Fall Protection Component Labels
- Energy Absorbing Lanyard/ Self-Retracting Lanyard
- Warning Signs/Tape or Barricades
- 2" x 4" back rails & toe boards
- 2" x 6" first staging

Do ✓

- DO ensure that fall protection plans are site specific and address the type of equipment used at the workplace
- DO inspect all equipment before each use
- Do remove from service if defects are found
- DO read and understand manufacturer's instructions
- DO use caution around moving machinery, electrical hazards and chemical hazards

Do Not ✗

- DO NOT alter or intentionally misuse equipment
- DO NOT use if defects are found
- DO NOT install or use if you have not been trained in its correct application and use
- DO NOT throw or drop equipment or parts from a building or heights.
- DO NOT use equipment or parts if they have been exposed to extreme heat or cold. Avoid areas where chemical vapors are present.

Procedure

Note: - **This system must be used in strict compliance with Provincial OHSA & Regulations.**
- **Maximum spacing of brackets and main frames is eight (8) feet.**
- **Brackets must be capable of supporting at least four (4) times the load that is likely to be on it. (The PR2000 Bracketed Scaffold was tested to 4700 lbs of downward load).**

1) **Conduct a pre-starting inspection of equipment and work area**
   a) Inspect all Work Platform PR 2000 equipment and parts before and after each use to insure there is no damage or deformation to any of the equipment or parts
   b) Inspect to insure there is no damage as a result of rust or corrosion. Discard if necessary.
   c) Pay special attention in checking for splitting, cracking or deterioration of this equipment; if any, discard at once.

   d) Inspect the roof area for trip hazards, openings, electrical hazards, etc.
   e) All personnel on the roof shall use appropriate fall arrest equipment.

Procedure **(con't)**

2) Preparing to Install the PR 2000 Working Platform

a) When installing from a ladder, refer to Job Procedure "Ladders – Extension Ladder Set-up and Use".

b) When installing from the roof, ensure anchor points are used with Fall Arrest System.

3) Installation of PR 2000

a) **Step 1**

i) On re-roofs remove the old shakes or shingles to expose solid rafter.

ii) On new construction use exposed truss or rafter.

b) **Step 2**

i) Nail Rafter Bracket to solid rafter or truss using four (4) penny nails.

Example of fastened Rafter Bracket and attachment of Main Frame and also showing 2 x 6 First Staging.

Note how the PR 2000 does not interfere with the existing gutter.

c) **Step 3**

i) Before installing Main Frame adjust and lock Adjustable Bar to accommodate soffit depth.

ii) Protect wall surface at contact points as required.

Procedure **(con't)**

3) Installation of PR 2000 (con't)

a) **Step 4**

i) Lift the Main Frame and fit into Rafter Bracket.

ii) Note how the system does not interfere with the existing gutter or the fascia.

b) **Step 5**

i) Measure approximately eight feet and repeat STEP 1 to STEP 4.

ii) Continue this procedure until the required number of units are installed.

c) **Step 6**

i) Install planks – 2" x 4" back rails and toe boards. 2" x 6" first staging.

Please contact Safety Coordinator @ 506-576-6683, if you have any questions regarding what is expected for the procedure or for clarification

The information contained in this publication is intended for general use and may not apply to every circumstance. It is not a definitive guide to government legislation and does not relieve persons using this publication from their responsibilities under the Workplace Safety and Health Act or applicable legislation.
The appropriate regulations and statutes should always be consulted and adhered to. Atlantic Roofers Limited/North Shore Roofing Ltd. and its affiliates do not guarantee the accuracy of, nor assume liability for the information presented here.

General

Where there is a potential fall hazard, work must be carried out without undue risk to the worker. The PR 600 system was designed to be used on top of flat roofs and clamps to most standard utility carts.

Hazards Present

- Serious Injury
- Death

Protective Mechanisms

- PPE
- Manufacturers Recommendations
- Training/Supervision

Equipment / Tools Required

- Crane and/or Hoist
- Rigging Equipment
- Warning Signs/Tape or Barricades
- PR 600 Equipment
- Ballast Weight
- Utility Roof Cart
- Full Body Harness & Lanyard
- Lifeline
- Rope Grab

Do

- DO ensure that fall protection plans are site specific and address the type of equipment used at the workplace
- DO inspect all equipment before each use
- Do remove from service if defects are found
- DO read and understand manufacturer's instructions
- DO use caution around moving machinery, electrical hazards and chemical hazards
- DO have a rescue plan and the ability to implement a rescue. Training should be provided on a periodic basis

Do Not

- DO NOT alter or intentionally misuse equipment
- DO NOT use if defects are found
- DO NOT install or use if you have not been trained in its correct application and use
- DO NOT throw or drop any equipment from building or heights
- DO NOT use on solid ice

Procedure

2) Conduct a pre-starting inspection of equipment and work area

a) Check each component for defective or missing parts.

b) Inspect the roof area for trip hazards, openings, electrical hazards, etc.

c) Guardrail System shall be secured around any roof openings or hazards.

3) Hoist PR 600 System to Roof

a) This system is designed to break down into component parts allowing one person to take the system up to the roof in an elevator and assemble it on the roof. OR

b) Check the roof and deck for deterioration before allowing personnel or equipment access to the roof. Make certain the roof and structure is strong enough to support the weight.

c) Identify appropriate setup area on the roof.

Procedure (con't)

2) Hoist PR 600 System to Roof (con't)

d) Make sure everyone on the ground is completely clear of the hoisting area.

e) Ensure appropriate number of personnel are available for the task.

f) Consult your "Hoisting" Job Procedure for complete hoisting procedures before proceeding to crane or hoist the guardrail system.

3) Assembly Instructions

a) The utility cart must be positioned parallel to the leading edge with the pivot arms pointing toward the edge for *Fall Arrest*.

b) Place the base assembly onto the utility roof cart & tighten down to the utility cart.

c) Slide the extension arms into the base assembly, tighten down to secure the arms into place.

d) Ballast basket slides into the extension arms and is secured with tighteners to hold basket in place.

e) Insert the pivot arms onto opposite side of base assembly and insert joining bolts.

f) Place weight into Ballast Basket. The required amount of weight is 181 Kg (400 lbs.).

4) Deck Instructions

a) The distance of the *Pivot Points* to the leading edge shall be no less than 4.6 meters (15 ft).

b) The *Ballast Basket* is to be extended out to a distance of 2.8 meters (9 ft) from the *Pivot Arms.*

c) Turn the handle on the *Wheel Jack* to lift the *Ballast Weight*. This lowers the *Pivot Points* to touch onto the roof's deck, but not penetrating, setting the *Fall Protection System* in place.

d) Place the Wheel Lock in position locking front pivoting wheel into place but still allows the system to be pulled in a forward direction.

e) The *Lifelines* are then hooked up to the *D-Ring* Anchors located at the top of the *Mast* and rigged so that if a worker falls over the edge, the workers fall will be *arrested not more than .6 meters (2 ft).*

f) If there is <u>no existing roofing membrane</u> then an *Accessory Plate* is bolted to the *Pivot Arm Points* and mechanically fastened to the roof deck with 4 – 1cm x 5.1cm (3/8 x 2") wedge anchor, embedded 3.8cm (1 ½ inches) into concrete.

g) On <u>wood decks</u> where there is no existing membrane, turn the handle on the wheel jack to lift the Ballast Weight until the pivot points depress the wood.

h) On <u>steel fluted decks</u>, where the flutes run perpendicular to the leading edge, an accessory plate must be bolted to the pivot arm plates and accessory plate is fastened to the steel deck with a minimum 5/16 x 1 ½" self-tapping sheet metal screw.

i) The PR 600 shall not be used for fall arrest on leading edge work where the parapet is higher than .7 meters (30 inches).

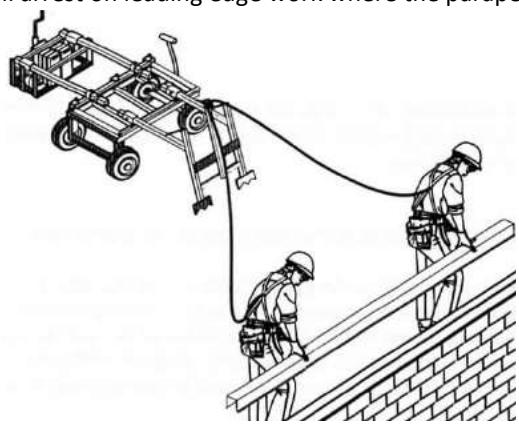

Figure 1

***Procedure* (con't)**

5) Moving the PR 600 System

a) Turn handle on Wheel Jack which lowers the Ballast Basket and in turn raises the Pivot Arms allowing the system to be easily pulled without damaging the roof.
b) Reset at new destination by raising the ballast and lowering the pivot arms.

6) # of Workers Rigged

a) No more than one (1) person can be rigged under *Fall Arrest* with a second person rigged as *Travel Restraint.* (See Figure 2)
b) Up to two (2) workers can be tied off to the same unit at the same time. If a worker falls over the edge, the lifeline will pull on top of the mast, pulling on the cross member that is welded to the pivot arms, pushing on the lower cross member, driving the pivot arm plates into the roofing membrane. This anchors the *PR 600* system, creating a moment between the *Pivot Arms* and the *Ballast Weight*, thus arresting the workers fall.

Figure 2
Rigging Chart

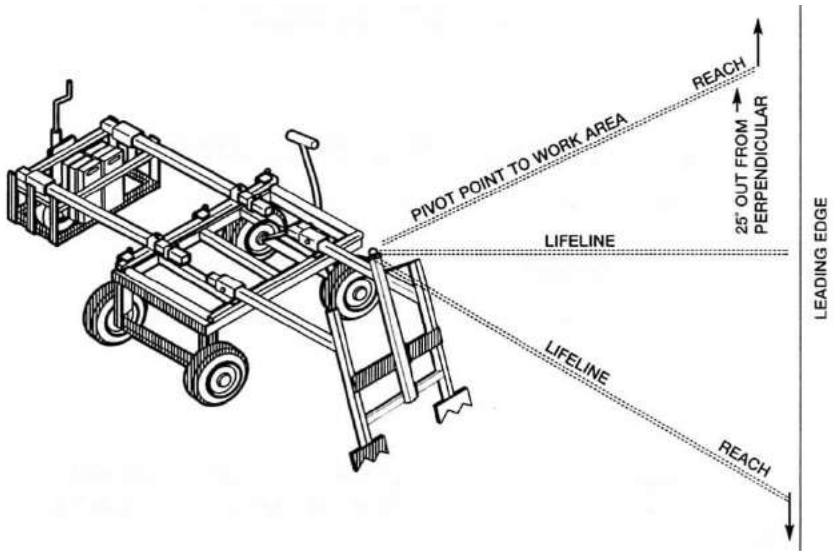

Fall Arrest – Utility Cart Parallel to Leading Edge

Pivot Points From Edge	Life Line	Reach Along Leading Edge
20 ft.	22 ft.	25 ft.
25 ft.	27 ft.	30 ft.
30 ft.	32 ft.	32 ft.
35 ft.	37 ft.	35 ft.
40 ft.	42 ft.	40 ft.

Travel Restraint

Pivot Points From Edge	Life Line	Reach Along Leading Edge
20 ft.	19'- 6"	21 ft.
25 ft.	24'- 6"	24 ft.
30 ft.	29'- 6"	28 ft.

Procedure (con't)

2) Important Points

a) Worker shall not round a corner or work at right angle to the pivot arms at an opposing leading edge.

b) In the event of a workers fall at a right angle to the pivot arms, could cause the PR 600 to move in a lateral

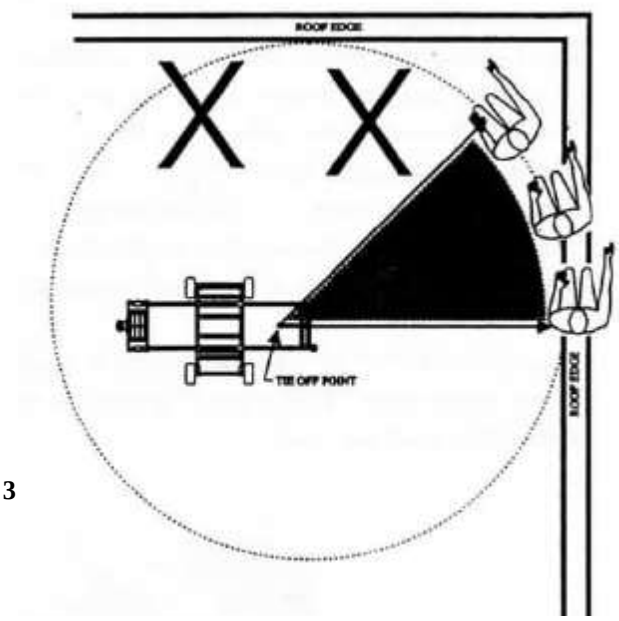

Figure 3

c) Rigging must be carried out by a competent person to the distance of chart (Figure 2).

d) The lifeline is not to exceed two (2) feet in addition to the distance from the pivot arms perpendicular to the leading edge.

e) Maximum weight of a worker including tools shall not exceed greater than 141 Kg. (310 lbs.)

f) When two workers are hooked to the PR 600 anchor, one person can rig a safety line, not to exceed .6 meters (2 ft.) from the distance of the pivot points to leading edge.

g) The second person will not rig the lifeline within 6" of the leading edge, thus not allowing the worker to fall over the edge and restraining the worker to the confines of the roof.

h) In case of a fall by the first person, the second person is available to rescue the first person.

REFERENCES:
Form F-02-2 Fall Protection Plan

Please contact Safety Coordinator @ 506-576-6683, if you have any questions regarding what is expected for the procedure or for clarification

The information contained in this publication is intended for general use and may not apply to every circumstance. It is not a definitive guide to government legislation and does not relieve persons using this publication from their responsibilities under the Workplace Safety and Health Act or applicable legislation.
The appropriate regulations and statutes should always be consulted and adhered to. Atlantic Roofers Limited/North Shore Roofing Ltd. and its affiliates do not guarantee the accuracy of, nor assume liability for the information presented here.

General

This Job Procedure describes the use of a control zone with a safety monitor as an acceptable work procedure.

Hazards Present

• Minor Injury	• Serious Injury	• Death

Protective Mechanisms

• PPE	• Manufacturers Recommendations	• Training/Supervision

Equipment / Tools Required

• Rope with Safety Flags	• Safety Cones / Barricades	• Warning Signs
• High Visibility Armbands	• High Visibility Vests	• Warning Tape

Do

- DO ensure that fall protection plans are site specific and address the type of equipment used at the workplace
- DO inspect all equipment before each use
- Do remove from service if defects are found
- DO read and understand manufacturer's instructions
- DO use caution around moving machinery, electrical hazards and chemical hazards
- DO have a rescue plan and the ability to implement a rescue. Training should be provided on a periodic basis

Do Not

- DO NOT alter or intentionally misuse equipment
- DO NOT install or use if you have not been trained in its correct application and use
- DO NOT throw or drop any equipment from building or heights
- DO NOT use any equipment or tools if defects are found

Procedure

1) **Directions**
   a) **A control zone with a safety monitor may be used as the means of fall protection under section where it is not practicable to use a method of fall restraint or fall arrest or where the use of a fall arrest system will result in greater hazards.**
   b) Use of a control zone is not permitted on a working surface where the slope of the surface exceeds 3 vertical inches in 12 horizontal inches or for scaffolds.

2) **Definitions** (See Figure 1)
   a) **Control Zone** means the area between an unguarded edge of a building or structure and a line which is set back a safe distance of at least two meters (6.5 feet).
   b) **Safety Monitor System** means a system in which a trained worker is designated to monitor work activities in a control zone to ensure that work is done in a manner that minimizes the potential for a worker to fall.
   c) **Buffer Zone** means the area immediately outside the inner edge of the control zone and extending a further two meters (6.5 feet) in from that edge.

***Procedure* (con't)**

3) Width of the Control Zone

a) Must be at least two metres (6.5 feet), with additional distance if any of the following conditions exists:

i. The working surface is slippery or sloped.

ii. The work is carried out at an elevation relative to the unguarded edge.

iii. The risk is increased by the use of equipment near the control zone.

b) Only workers directly required for the work at hand should be inside the control zone.

4) Raised Warning Line (See Figure 1)

a) If a worker will be working within the "buffer zone" (less than two metres (6.5 feet) away from the inside edge of the control zone), a line defining the control zone is to be established along the internal edge of the control zone by a raised warning line or other equally effective means at all times during such work.

b) For example, an acceptable raised warning line includes a line with both of the following:

iv. A high-visibility material, or a line flagged or clearly marked with high-visibility materials at intervals not exceeding two metres (6.5 feet)

v. Rigged and maintained to be between 0.85 metres and 1.15 metres (34 and 45 inches) above the working surface

c) If workers are to work within the buffer zone, a raised warning line must be put in place *prior* to work starting in the buffer zone.

d) If workers will be further than the boundary of the buffer zone at all times, a raised warning line is not required.

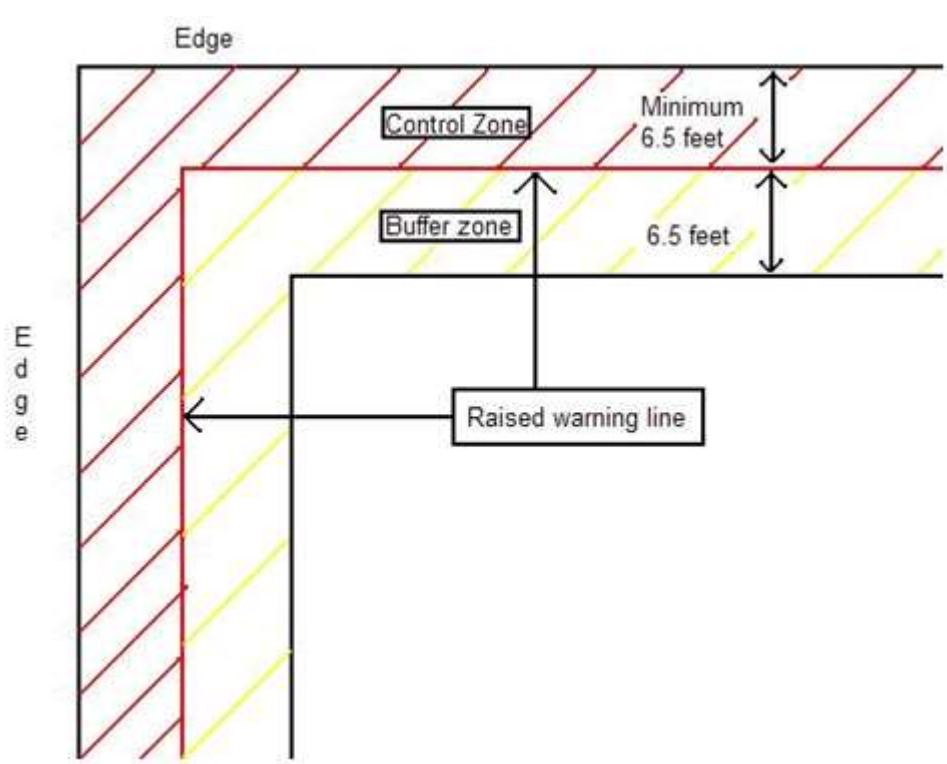

Figure 1

Note: Supervisors must ensure that workers are not within the buffer zone at any time if a warning line is not used.

***Procedure* (con't)**

5) Safety Monitor

a) The role of the safety monitor is to ensure that the work activity in the control zone is performed in accordance with the fall protection plan and in a manner that minimizes the potential for a worker to fall. A safety monitor is to:

i. Be experienced in the work overseen and trained in the role of safety monitor
ii. Be present at all times when a worker is in the control zone
iii. Have complete authority over the work as it relates to the prevention of falls
iv. Engage in no other duties while acting as the safety monitor
v. Be located so as to have a clear and continuous view of the work
vi. Be able to have normal voice communication with the workers being protected
vii. Monitor no more than eight workers
viii. Be instantly distinguishable from other workers (eg; brightly colored armband)

6) Exception

a) If it is impracticable to use a fall protection system where an employee is engaged in weatherproofing of a roof, you may proceed with a safety monitor and control zone system without using a raised warning line by declaring the entire work surface the control zone if:

i. The roof has a total area of less than 23 m² (247 ft²)
ii. A roof or canopy or walkway that have slopes of 3 in 12 or less

b) employee has been fully instructed in work procedures and hazards and in how to protect himself or herself from falling

c) This should be specifically noted in the fall protection plan.

d) The safety monitor should be positioned in a safe location and have a clear view of the work.

REFERENCES:
Form F-02-2 Fall Protection Plan

Please contact Safety Coordinator @ 506-576-6683, if you have any questions regarding what is expected for the procedure or for clarification

The information contained in this publication is intended for general use and may not apply to every circumstance. It is not a definitive guide to government legislation and does not relieve persons using this publication from their responsibilities under the Workplace Safety and Health Act or applicable legislation.
The appropriate regulations and statutes should always be consulted and adhered to. Atlantic Roofers Limited/North Shore Roofing Ltd. and its affiliates do not guarantee the accuracy of, nor assume liability for the information presented here.

General

Vertical Lifelines and Vertical Lifeline Subsystems are used as part of a Personal Fall Arrest or Restraint System. They are not designed for use in horizontal applications.

Purpose

- Fall (Travel) Restraint
- Fall Arrest

Hazards Present

- Serious Injury
- Death

Protective Mechanisms

- PPE
- Manufacturers Recommendations
- Training/Supervision

Equipment / Tools Required

- Tie-off Adapter
- Snap Hook
- Lifeline 16mm (5/8")
- Rope Grab 16mm (5/8")
- Labels
- Carabiner
- Full Body Harness
- Energy Absorbing Lanyard/ Self-Retracting Lanyard
- Attachment Eye

Do

- DO ensure that fall protection plans are site specific and address the type of equipment used at the workplace
- DO inspect all equipment before each use
- Do remove from service if used in a fall
- DO read and understand manufacturer's instructions
- DO ensure anchorage points are rigid
- DO use caution around moving machinery, electrical hazards, chemical hazards and sharp edges
- DO have a rescue plan and the ability to implement a rescue. Training should be provided on a periodic basis

Do Not

- DO NOT alter or intentionally misuse equipment
- DO NOT use if subjected to fall arrest forces
- DO NOT install or use if you have not been trained in its correct application and use
- DO NOT use if there is a reason to doubt your fitness to absorb the impact from a fall arrest
- DO NOT store in direct sunlight. Avoid areas where chemical vapors are present
- DO NOT use non-locking connectors with this system

A Snap Hook
B Lifeline
C Anchorage Point
D Rope Grab
E Shock Absorbing Lanyard
F Dorsal D-Ring
G Attachment Eye
H Tie-Off Adaptor

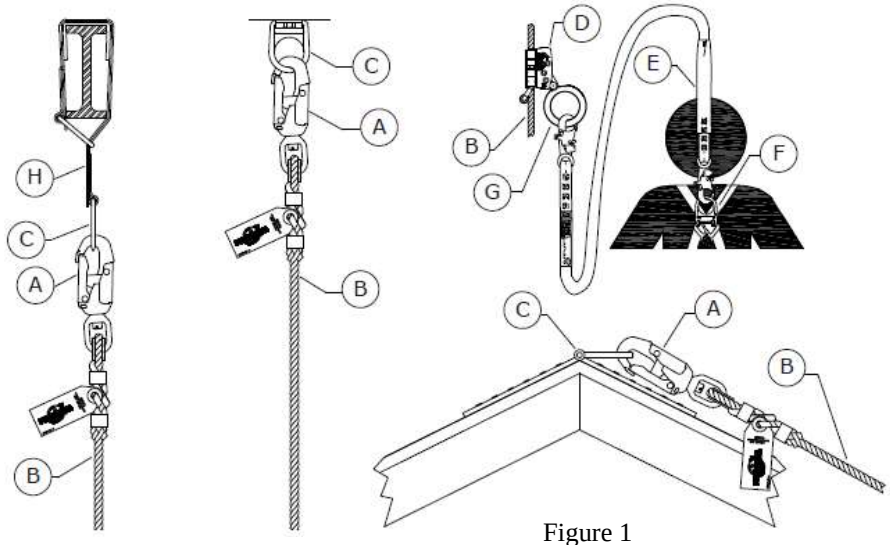

Figure 1

Equipment Requirements

1. **System Connectors**
   a. Connectors (hooks, carabiners, D-rings) must be capable of supporting at least 2268 Kg (5,000 lbs.)
   b. Connectors must be compatible in size, shape and strength with the anchorage or other system components. Non-compatible connectors may unintentionally disengage (roll-out).
   c. Self-locking snap hooks and carabiners are required.

2. **Anchorages for <u>Fall Arrest</u>**
   a. Must be capable of sustaining static loads in the directions permitted by the personal fall arrest system of at least 2268 Kg (5,000 lbs.)
   b. Anchorages used for attachment of personal fall arrest systems shall be independent of any anchorage being used to support or suspend platforms.

OR

3. **Anchorage for <u>Fall Restraint</u>**
   a. Must be attached to an anchorage capable of sustaining static loads in the directions permitted by the restraint system of at least 1360 Kg (3,000 lbs.).

Figure 2

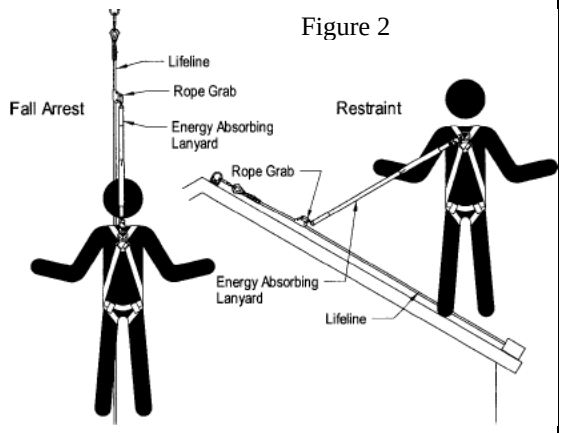

Limitations

4. **Capacity**
   a. The vertical Lifeline is designed for use by persons with a combined weight (clothing, tools, etc.) of 59 to 140 Kg (130 to 310 lbs.)
   b. No more than one (1) person may be connected to a single lifeline.

5. **Free Fall for <u>Fall Arrest</u>**
   c. Fall <u>Arrest</u> systems used with this equipment must limit free fall to 1.8 m (6 ft.)

OR

6. **Free Fall for <u>Fall Restraint</u>**
   a. <u>Restraint</u> systems must be rigged so that no vertical free fall is possible.

7. **Swing Falls**
   d. Swing Falls occur when the anchorage point is not directly above the point where a fall occurs. The force of striking n object in a swing fall may cause serious injury or death.
   e. Minimize swing falls by working as close to the anchorage point as possible.
   f. Do not permit, in other words, eliminate, a swing fall if injury could occur.

8. **Body Support**
   g. A full body harness must be used.

Figure 3

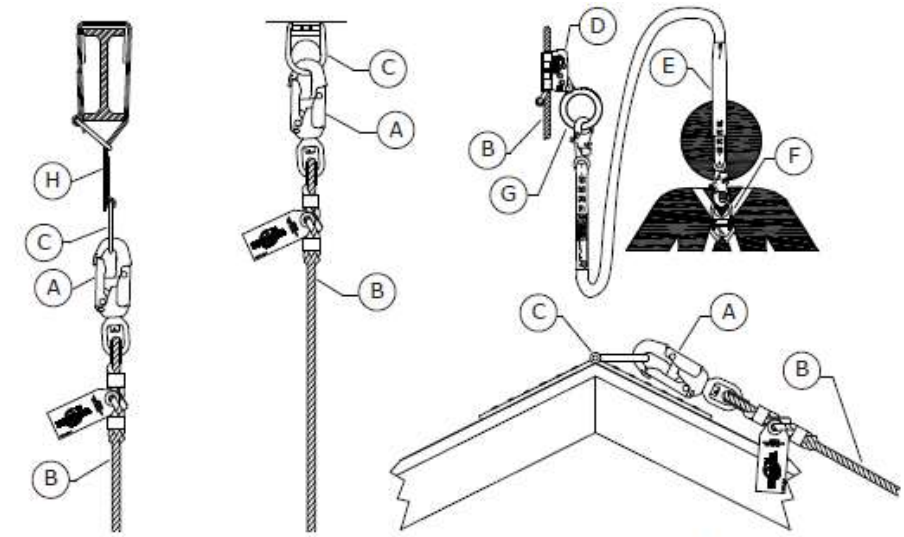

A Snap Hook B Lifeline C Anchorage Point D Rope Grab E Shock Absorbing Lanyard F Dorsal D-Ring
G Attachment Eye H Tie-Off Adaptor

Figure 4

Procedure for Use

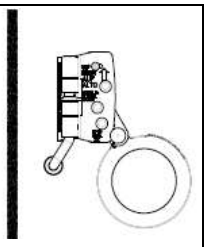

Figure 5

9. Before Each Use

a. Inspect all components of the vertical lifeline system.

b. Do not use any equipment if inspection reveals an unsafe or defective condition.

c. Read and understand manufacturer's instructions for all components.

10. Connect to Anchorage (See Figure 4)

d. Connect the Snap Hook (A) on the Vertical Lifeline (B) to a rigid Anchorage Point (C) that meets the requirements on page 2 "Equipment Requirements".

e. Make sure only self-locking snaps hooks and carabiners are used and all connections are compatible in size, shape and strength.

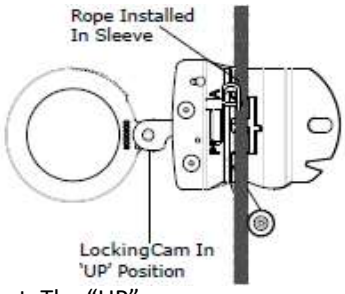

Figure 6

11. Attach the Rope Grab

f. Attach the Rope Grab (D) to the Vertical Lifeline (B).

i. Ensure the rope grab is in the "UP" position as indicated on the product. The "UP" end of the rope grab must be oriented towards the anchorage. (See Figure 5)

ii. Unscrew the knurled knob until the hinged channel bracket opens.

iii. Pull the lifeline sleeve apart until the unit is fully opened. (See Figure 6)

iv. To install on the lifeline, raise the locking cam to the "UP" position and install the rope inside the lifeline channel and close the rope grab halves. Screw-in the knurled knob and slide the locking latch closed. (See Figure 7)

v. Test the rope grab operation by pulling down on the locking cam. The rope grab must lock onto the lifeline and prevent any descent on the lifeline once the cam is engaged.

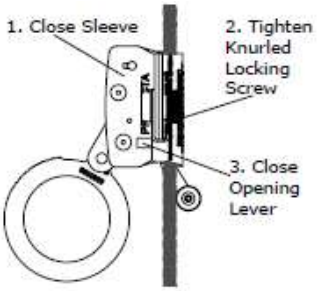

Figure 7

Procedure for Use (con't)

12. Position the Rope Grab on the Lifeline

g. Using the lanyard connected to the rope grab, pull up slightly on the rope grab locking cam to release it from the locked position. Always keep a minimum of 3.7m (12 ft.) of rope below the rope grab to accommodate locking distance and fall clearance.

h. Using the connected lanyard, raise or lower the rope grab to the desired location. Apply tension to the lifeline to assure smooth travel of the rope grab on the lifeline. Lifeline tension can be achieved by adding a weight on the lifeline end or extending additional lifeline (in a hanging orientation) to provide weight.

i. After locating the rope grab, position by pulling the locking cam until the cam lever is in the full down position. The locking cam must be released before attempting to reposition the rope grab.

13. Put on the Full Body Harness

j. A full body harness must always be used with a vertical lifeline system as per training and certification provided by the company.

14. Connect the Shock Absorbing Lanyard

k. Connect the Snap Hook on the Shock Absorber end of the Lanyard (Figure 4)(E) to the back Dorsal D-Ring (F) on the Full Body Harness. Connect the Snap Hook on the other end of the Lanyard to the Attachment Eye (G) on the Rope Grab.

15. System Removal

l. Reverse procedure for removal.

Maintenance & Storage

16. Cleaning

a. Clean the Vertical Lifeline with water and a mild detergent. Wipe hardware with a clean, dry cloth and hang to air dry.

b. Do not force dry with heat.

c. An excessive build-up of dirt, paint, etc. may prevent the Vertical Lifeline from working properly, and in severe cases, weaken the rope.

17. Storage

d. Store the vertical Lifeline in a cool, dry, clean environment, out of direct sunlight.

e. Avoid areas where chemical vapors may be present.

f. Thoroughly inspect the Vertical Lifeline after extended storage.

REFERENCES:
Form F-02-2 Fall Protection Plan

Please contact Safety Coordinator @ 506-576-6683, if you have any questions regarding what is expected for the procedure or for clarification

The information contained in this publication is intended for general use and may not apply to every circumstance. It is not a definitive guide to government legislation and does not relieve persons using this publication from their responsibilities under the Workplace Safety and Health Act or applicable legislation.
The appropriate regulations and statutes should always be consulted and adhered to. Atlantic Roofers Limited/North Shore Roofing Ltd. and its affiliates do not guarantee the accuracy of, nor assume liability for the information presented here.

General

This informs workers about the dangers of portable fuel containers such as jerry cans igniting when being filled or used. Remember STOP, DROP AND ROLL.

Hazards Present

• Flash Fire / Explosion	• Eye/ Skin Irritation	• Inhalation

Protective Mechanisms

• Eye Protection	• Respiratory Protection	• Manufacturers Specifications
• Hand Protection	• WHMIS	• Training

Equipment / Tools Required

• Approved Containers	• PPE	• Spill Kit
• TDG Legislation	•	•

Do

- DO ensure that portable fuel containers are being placed on the ground while they are being filled from fuel dispensers (contact with the earth allows any build-up of static electrical charges to dissipate and if accidental overflow occurs during the filling the risk of a fire is reduced)
- DO keep the nozzle of the petrol dispenser in contact with the container at all times during the filling operation (this will maintain the electrical continuity and prevent a spark jumping across the gap between the nozzle and the container
- DO wear clothing to reduce static electricity and wear shoes with conductive soles
- DO keep one hand on the container while filling to reduce the likelihood of static electricity build up and discharge
- DO transport portable fuel containers secured, upright and away from heat sources, such as the sun, in a well-ventilated space
- DO avoid prolonged exposure to vapors
- DO keep your face away from the nozzle or container opening

Do Not

- DO NOT use a plastic funnel to fill a portable fuel container. The funnel will act as an insulator and promote the generation of static electrical charges
- DO NOT siphon gasoline by mouth
- DO NOT get back into your vehicle after fuelling has started. If you do, new static buildup can cause a flash fire. (Make sure you touch metal prior to starting any fuelling procedures)
- DO NOT mix even a small amount of gasoline with kerosene or diesel fuel
- DO NOT smoke where gasoline is handled or stored
- DO NOT leave your vehicle's engine running when filling
- DO NOT induce vomiting if swallowed
- DO NOT dispense in areas that don't get plenty of fresh air

Procedure

1) **Conduct a pre-starting inspection of equipment and work area**
   a) Check the fuel container to make sure it is an approved container for fuel.
   b) Do not use containers that do not seal properly.
   c) Check the area to ensure there are no unsafe acts or conditions present.
   d) Take note of where the spill kit and fire extinguisher is located.

2) **Prepare to fill fuel container**
   a) Remove container from inside vehicle or from bed of truck.

***Procedure* (con't)**

3) Prepare to fill fuel container

a) Remove container from inside vehicle or from bed of truck.

b) Place container on the ground to avoid a possible static electricity ignition of fuel vapors. Never fill inside a vehicle or its trunk, the bed of a pickup truck, or the floor of a trailer.

4) Filling the fuel container

a) Remove cap from container.

b) Release nozzle from fuel tank and select appropriate grade.

c) Insert nozzle into fuel container keeping nozzle in contact with the rim of the container while filling.

d) Squeeze handle on nozzle allowing fueling.

e) Manually control the nozzle valve throughout the filling process.

f) Fill slowly to decrease the chance of static electricity buildup and minimize spills and splattering.

Figure 1

g) Fill container no more than 95% to allow for expansion.

h) Place cap tightly on the container after filling – do not use containers that do not seal properly.

5) Emergency Actions

a) If you come into contact with gasoline or diesel fuel:

i) **EYES:** Flush with water for 15 minutes.

ii) **SKIN:** Remove any gasoline soaked clothing and wash exposed areas with soap and water.

iii) **INGESTION:** Call physician. NO NOT induce vomiting.

iv) **INHALATION:** Remove to fresh air upon being overcome and/or experiencing an unusual symptom (i.e. vomiting, headaches, drowsiness, and other central nervous system)

6) Fire response

a) Hit the "Emergency Stop Button"

b) Evacuate non-essential personnel and keep pedestrian and vehicular traffic out of the danger area as much as possible.

c) Use Fire Extinguisher to put out small fires. Do not try to put out a fire that is larger than the size of a small trash pail.

d) Notify Emergency Personnel.

7) Major Spill (more than 10 litres)

a) If it safe to do so, attempt to contain the spill by using absorbent material, soil, etc.

b) Identify the direction that the spill is moving and protect catch basins, manholes, drains, waterways, dirches and other sensitive low areas in the path of the spill.

c) Use rubber mats to cover any drains, manholes and catch basins

d) Notify Emergency Personnel and under their direction efforts to cleanup can be commenced.

8) Minor Spill response (anything less than 10 litres)

a) Use materials available on-site in the Spill Containment Kits. Further containment and removal of the spill should be undertaken.

Please contact Safety Coordinator @ 506-576-6683, if you have any questions regarding what is expected for the procedure or for clarification

The information contained in this publication is intended for general use and may not apply to every circumstance. It is not a definitive guide to government legislation and does not relieve persons using this publication from their responsibilities under the Workplace Safety and Health Act or applicable legislation.
The appropriate regulations and statutes should always be consulted and adhered to. Atlantic Roofers Limited/North Shore Roofing Ltd. and its affiliates do not guarantee the accuracy of, nor assume liability for the information presented here.

General

Protecting workers from injuries associated with the care and handling of propane cylinders.

Hazards Present

• Explosion	• Eye/ Skin Irritation/ Burns	• Asphyxiation (Gas Leak)

Protective Mechanisms

• ERP (Emergency Response Plan) • TDG (Transportation of Dangerous Goods) Legislation	• Safe Work Practices/Procedures • WHMIS	• Manufacturers Specifications • PPE & Training

Equipment / Tools Required

• Approved Cylinders •	• PPE •	• Tie Down Straps •

Do ✓

- DO have an adequate fire extinguisher present
- DO make sure tanks are undented, with valve guards, and have been tested/validated, and have safety labels
- DO make sure fuel lines have regulators
- DO ensure propane bottles are transported and secured in an upright position
- DO ensure that propane bottles are properly shut off
- DO ensure cylinders in storage or transit are equipped with valve cap or collar and regulator is removed
- DO use soapy water when checking for a connection leak

Do Not ✗

- DO NOT smoke when handling propane fuel equipment
- DO NOT store cylinders inside buildings, or carried in closed canopies, vehicles or tool vans
- DO NOT paint cylinders over in any fashion
- DO NOT use cylinders if shoulder label/stamp is not legible
- DO NOT use cylinders within 10-12 feet of fresh air intakes on the roof

Procedure

1) Conduct a pre-starting inspection

a) Check for the date of manufacture or the last valid inspection date (10 years or less).

b) Visually inspect the cylinder for cuts, gouges, dents and rusting.

c) Test for leakage which may render cylinder defective. Use soap or leak detector (service valve, valve, sight gauge, relief valve, vent valve).

d) Check that the relief valve fitting is approximately 90° from the locating holes and secure.

e) Check service valve for defects (handle broken, spindle bent, defective or missing "O" ring or back up ring.

Figure 1

2) Transporting cylinders

a) Load cylinders in open truck bed or open trailer.

b) Secure in an upright position with a safety plug (a POL plug) in place. A POL plug will prevent gas leakage when the valve is accidentally turned on. (See Figure 1)

c) Keep the transport area well ventilated to prevent gas build up.

Procedure (con't)

2) Transport cylinders (con't)

d) If cylinders are required to be lifted onto the roof area; they must be secured in an upright position to propane lifter dollies.

e) **NEVER lift the propane tanks around the collar. These can break easily and were not designed for this purpose**

f) **If cylinder must be moved around on the roof use the dollies.**

3) Handling

a) Only use propane and propane appliances for their intended purpose and only store enough for your immediate purposes.

b) Make yearly cleaning, maintenance and safety inspections of propane cylinders and/or appliances part of your routine. Where required, have them inspected or repaired by a trained professional.

c) When using propane appliances, keep them away from anything that can burn, including dry vegetation, deck rails, wood balconies, twigs, etc. and items in or around vehicles

d) When handling propane and propane appliances, keep them away from heat sources or flames, such as lit cigarettes.

e) Use propane outdoors in a cool, well-ventilated area; where possible.

f) To check for leaks, brush a soap and water solution over the suspected area — bubbles will form if there is a leak. If you suspect a leak, leave the area immediately, shut off the gas supply if possible and remove any possible sources of ignition. Call the fire department from a nearby location.

g) Always have a fire extinguisher available.

h) If equipment will not be used for a certain length of time, (e.g.: over a weekend, overnight etc.) close the service valve of the tank.

4) Changing a Cylinder (See Figure 2)

a) Follow the manufacturer's instructions for using and fitting propane appliances to their gas supply.

b) Secure the tank to the unit with the tank retaining straps. Make sure that they are working properly. Adjust as required

c) Connect the gas line to the tank by lining up the gas line fitting with the service valve outlet and turning clockwise. Hand tighten only. Do not use pliers, wrenches, etc. as this will damage the "O" ring.

d) After having connected the gas line to the tank, slowly turn the service valve to the "fully on" position. Check for a leak by listening for escaping gas or you may notice a "sour smell".

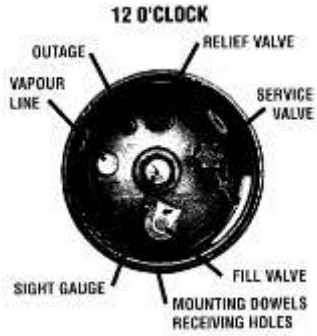

Figure 2

e) If there is a leak, close the service valve immediately and check connection. If connection is O.K then try another tank.

f) Attach a "Repair Tag" to the faulty tank and set it "right side up". Advise foreman. If the second tank also has a leak, contact the foreman to arrange for repair.

g) Ensure when changing the tank that you are a minimum of 6 feet from any air intake to the building.

5) Storage

a) When storing propane and propane appliances, keep them away from heat sources or flames, such as lit cigarettes

b) Store propane cylinders outdoors, preferably in a locked, detached shed or shaded area. Excess heat may overpressure the cylinder and cause it to release propane form the cylinder relief valve

c) Exposure to propane can result in nausea and headaches. If either of these symptoms develops, get outside immediately and breathe fresh air. Under extreme conditions, exposure to flammable gases can result in death.

Please contact Safety Coordinator @ 506-576-6683, if you have any questions regarding what is expected for the procedure or for clarification

The information contained in this publication is intended for general use and may not apply to every circumstance. It is not a definitive guide to government legislation and does not relieve persons using this publication from their responsibilities under the Workplace Safety and Health Act or applicable legislation. The appropriate regulations and statutes should always be consulted and adhered to. Atlantic Roofers Limited/North Shore Roofing Ltd. and its affiliates do not guarantee the accuracy of, nor assume liability for the information presented here.

General

A job hazard assessment is a method to identify existing and /or potential hazards of a job. Each task will be studied and each step recorded so that the entire job process is considered. Hazards (or potential hazards) are then more easily identified and the best way to reduce or eliminate those hazards can be determined.

Hazards Present

• Falls / Slips / Trips	• Explosions	• Inhalation of fumes
• Broken Bones	• Burns	• Death

Protective Mechanisms

• ERP (Emergency Response Plan)	• Safe Work Practices/Procedures	• Manufacturers Specifications
• Training / WHMIS	• MSDS	•

Equipment / Tools Required

• Hazard Assessment Form (P-02-1)	• Clipboard	• Pen / Pencil

Do

- DO try to involve more than 1 person when performing the JHA
- DO ensure the most experienced person is on the Job Hazard Assessment team
- DO perform a job hazard assessment on every job before beginning any site work

Do Not

- DO NOT try to perform a Job Hazard assessment remotely. Always perform on site.
- DO NOT over complicate the procedure. Follow the steps outlined here

Procedure

1) What is a Job Hazard Assessment?

A risk assessment is simply a careful examination of what, in your work, could cause harm to people, so that you can weigh up whether you have taken enough precautions or should do more to prevent harm. Workers and others have a right to be protected from harm caused by a failure to take reasonable control measures.

Accidents and ill health can ruin lives and affect your business too if output is lost, machinery is damaged, insurance costs increase or you have to go to court. You are legally required to assess the risks in your workplace so that you put in place a plan to control the risks.

2) Definitions

Hazard is anything that may cause harm, such as chemicals, electricity, working from heights, fixing a photocopier paper jam, etc.

Risk is the chance, high or low, that somebody could be harmed by these and other hazards, together with an indication of how serious the harm could be.

Critical Task is a sequence of steps designed to accomplish a goal. We'll define a job task as a segment of the operation necessary to advance the work. (e.g. operating a grinder, mopping hot asphalt.

3) Prior to beginning the job hazard assessment

a) Gather necessary items to conduct the job hazard assessment efficiently and smoothly.

b) Arrange to meet your assessment team on the job site

Procedure **(con't)**

4) Critical Tasks to be analyzed

a) Walk through the job site to view and analyze the tasks that will be undertaken by the work crew.

b) Ask employees what they think. They may have noticed things that are not immediately obvious to you.

c) Record each task that could be potentially harmful to employees, other trades or general public.

d) Listed below are some commonly selected types of tasks selected for the JHA

i) **Dangerous Jobs:** based on the number of incidents (accidents and dangerous occurrences) documented over a given time period and resulting in harm or potential harm. Examples include jobs where an incident, hazardous condition or exposure to harmful substances has caused, or could cause, serious injury.

ii) **New Tasks:** due to lack of experience, hazards in new tasks may not be obvious or anticipated.

iii) **Infrequently Performed Tasks:** workers may be in more danger when undertaking non-routine tasks or working alone.

iv) **Modified Tasks:** changes in job procedures or conditions may create new hazards.

5) Identify Hazards

a) List the things that could go wrong. (See Figure 1)

b) Remember to think about long term hazards to health (e.g. high levels of noise or exposure to harmful substances) as well as safety hazards.

c) Check manufacturer's instructions or data sheets for chemicals and equipment as they can be very helpful in spelling out the hazards and putting them in their true perspective.

Critical Task	Hazard	Rank	Controls	Person Responsible	Date Completed
1. Park the vehicle in a safe place	1 a) Vehicle parked too close to passing traffic (collision hazard) b) Vehicle parked on uneven or soft ground (jack tip over during change of tire) c) Vehicle may roll on driver if not properly braked and blocked				
2. Remove spare and tool kit	2 a) Muscle strain or hand injuries from lifting spare				
3. Pry off hubcap and loosen lug nuts	3 a) Hub cap may pop off and hit driver due to excessive force or unsafe work procedure b) Lug wrench may slip and cause hand injuries				
4. And so on……	4 a)				

Figure 1 Examples of Task Steps in Changing a Flat Tire

6) Rank Hazards

a) Prioritize tasks to determine which ones having hazards would be most catastrophic should something happen, and what the probability is of it happening if the hazard remains uncontrolled.

b) Ranking hazards in this way will determine which ones should be dealt with first.

Procedure **(con't)**

6) Rank Hazards (con't)

c) Priority should always be to work on the ***"Worst First".***

d) Use the following "Consequence Categories" and "Probability Categories" to rank all hazards.

Hazard CONSEQUENCE Categories		
I.	**Catastrophic -**	May cause death, injury or company shutdown.
II.	**Critical -**	May cause severe injury, severe occupational illness or major property damage.
III.	**Marginal -**	May cause minor injury or minor occupational illness resulting in workday(s) lost, or minor property damage.
IV.	**Negligible -**	Probably would not affect personnel safety or health. Could result in a lost workday, and is still in violation of specific criteria.

Hazard PROBABILITY Categories		
(a)	**Probable (likely) -**	To occur immediately or within a short period of time when exposed to the hazard.
(b)	**Reasonably Probable -**	Probably will occur in time.
(c)	**Remote (Possible)-**	To occur in time.
(d)	**Extremely Remote -**	Unlikely to occur.

7) Identify Controls

The generally accepted measures to control hazards in a job, in order of preference are:

a) ***"Engineering Controls"*** *to Eliminate the hazard*

i) **Choose a different process** (find a new way to do the task)

ii) **Modify** and existing process. For example, consider changing the layout of the workflow, where the job is done, etc.

iii) **Substitute** a less hazardous substance or material, for example:
(a) Replace solvent-based paints with water-based
(b) Use jackhammers mounted on mobile equipment instead of hand held units
(c) Use welding instead of riveting to reduce noise

iv) **Dilute/reduce** the hazard by improving ventilation or using other environmental controls

v) **Modify or change** materials, equipment, or tools

vi) **Contain the hazard** by using machine guards, enclosures, booths, or similar devices to separate the workers from the hazard.

vii) **Revise Work Procedures** by changing the sequence of steps or adding additional steps.

b) ***"Administrative Controls"*** *to Reduce Exposure through:*

i) reducing the number of times workers are exposed to a hazard – for example, a machine could be modified so less maintenance is necessary

ii) using job rotations to limit the time each worker spends doing certain work

iii) providing emergency facilities, such as eyewash stations and emergency showers, to reduce harm if a worker is hurt

c) ***"Personal Protective Equipment Controls" (PPE)***

i) PPE should not be the only method used to reduce exposure except under very specific circumstances because PPE may "fail" with little or no warning. PPE should be a "last resort" method when all other controls have been exhausted.

Procedure **(con't)**

8) Communicate Information

a) Involve workers in the Job Hazard Assessment process.

b) Discuss and review JHA with site team before starting any work.

c) Involve workers in daily hazard reviews and weekly toolbox talks.

9) Review of Job Hazard Assessment

a) Work site activities are always changing and new hazards can arise. It is important to monitor both the hazard and control method(s) already implemented to ensure that controls are working effectively and that exposure to the hazard is reduced or eliminated. Some ways we can do this are:

i) Planned (formal) inspections

ii) Ongoing (informal) inspections

iii) Review of Job Hazard Assessment

iv) Field level hazard assessments

v) Toolbox talks

Please contact Safety Coordinator @ 506-576-6683, if you have any questions regarding what is expected for the procedure or for clarification

The information contained in this publication is intended for general use and may not apply to every circumstance. It is not a definitive guide to government legislation and does not relieve persons using this publication from their responsibilities under the Workplace Safety and Health Act or applicable legislation. The appropriate regulations and statutes should always be consulted and adhered to. Atlantic Roofers Limited/North Shore Roofing Ltd. and its affiliates do not guarantee the accuracy of, nor assume liability for the information presented here.

General

Protecting workers from injuries associated with the set-up and handling of hoisting apparatuses.

Hazards Present

• Cuts / Bruises	• Muscle Strain	• Fall from Height
• Death	•	•

Protective Mechanisms

• ERP (Emergency Response Plan)	• Safe Work Practices/Procedures	• Manufacturers Specifications
• PPE	• Training	•

Equipment / Tools Required

• Main Boom	• Vertical Support	• Gin Wheel
• Counterweights	• ¾" to 1" Rope	• Hooks/Slings/Shackles

Do

- DO make sure operators are trained before using this equipment
- DO read and thoroughly understand the manufacturer's instruction manual
- DO establish individual responsibilities and method of communication prior to setting up
- DO inspect all equipment before use
- DO wear heavy leather gloves when handling wire rope
- DO use fall protection when handling loads at the roof edge
- DO use tag lines to control loads
- DO check the hoist periodically during operation
- DO keep all body parts clear of moving parts

Do Not

- DO NOT use hoist structure to anchor life lines, worker's harness or other attachments
- DO NOT allow unauthorized personnel in the hoisting area
- DO NOT wrap hoist rope around the load. Load must be attached by lift rings, slings or other suitable means.
- DO NOT exceed the rated load capacity
- DO NOT operate while under the influence of drugs, alcohol or medication
- DO NOT climb on the hoist, use only a step ladder. Do not use an extension ladder
- DO NOT allow anyone under a raised load
- DO NOT hoist in an open doorway
- DO NOT allow any person to ride on the hoist

Procedure

1) **Conduct a pre-starting inspection**
   a) Determine that the roof deck can support the intended loads in hoisting and material handling in addition to the weight of the counterweight.
   b) Check the hoist components for cracked or broken welds as well as bent frame members. If any welds are damaged or frame members bent do not use the hoist. Replace the component immediately.
   c) Read the safety labels for warning of potential hazards that can cause serious injury. If a label becomes hard to read consult with your supervisor to have it replaced.
   d) Thoroughly read and understand the manufacturer's instruction manual.
2) **Before raising to roof level**
   a) Safe assembly of the 300 Hand Hoist requires two people. Injury can result from attempts to assemble this hoist by a single operator.
   b) Hoist installation and setup cannot proceed until all necessary parts and equipment have been raised to the roof deck. Use a hoist beam, swing beam, or freight elevator for this purpose.

Procedure **(con't)**

3) Raising to the roof level

a) The hoist pieces should be brought up to the roof and assembled more than 10 feet back from the roof edge.

4) Assembling the frame

a) The short flat component is the vertical support. While one person holds the vertical support in place the other should lift the long main boom, threading the small end through the top of the vertical boom.

b) On the bottom of the counterweight boom there is a round tube, this is fitted into the vertical square tube in the vertical hoist frame. See figure 1.

c) A 12" Gin wheel should be attached to the hoist via the provided hook on the wheel. There is a hoop on the hand hoist designed to accept the weight of the gin wheel. See Figure 2.

d) The rope should be threaded through the gin wheel now, while in a safe easily accessible position.

Figure 1

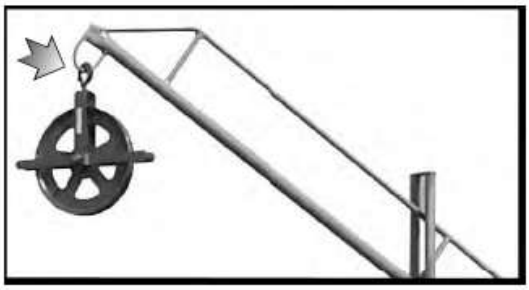

Figure 2
Properly Installed Gin Wheel

e) Now that the hoist is structurally assembled it is time to move it to the roof edge. With the operators on the roof deck side (away from the roof edge) slide the hoist into the desired operating position.

f) If there is no adequate safety rail system in place the operators should be in safety harnesses, as per local Fall Protection Regulations.

g) Once the hoist is in operating position install the counterweight ballast system.

h) A safety factor of 1.5 times the lifted amount must be used for ballast weight. E.g. for a full lift of 300 lbs, the hoist will require that 450 lbs of counterweight ballast be installed. Never use building process or pourable materials as counterweight. Use a permanent counterweight system with their weight clearly displayed.

5) Operating the Hoist

a) This hoist is designed to be operated by several people, working together to manually lift materials up to the roof deck.

b) The hoist is only a support frame. All lifting and braking of the load is done by the operator. For this reason it is important that the operator wear good gloves and keep the area under the hoist clear of people.

*** Always use ¾" to 1" rope, checking with the manufacturer that it's rated breaking strength is at least 5 times greater than the load being lifted.**

Procedure **(con't)**

6) Hand Signals - *See SWP # 21 Hoisting – Hand Signals

a) All persons must be familiar with hand signals.

7) Disassembly

a) Reverse steps 4a to 4h.

8) Removing parts from deck

a) Use a hoist beam, swing beam or freight elevator to lower the disassembled parts of the hoist to the ground.

b) Safely secure the hoist parts on the transporting medium without overloading before lowering to the ground

9) Maintenance

a) Only authorized, trained personnel should perform maintenance.

b) Except for maintenance that cannot be done otherwise, bring the load to its lowest position when working on any part of the hoist.

c) Shut down and lock out the hoist when not in use.

d) Lift rope/cable to roof level. Do not leave hanging to the ground.

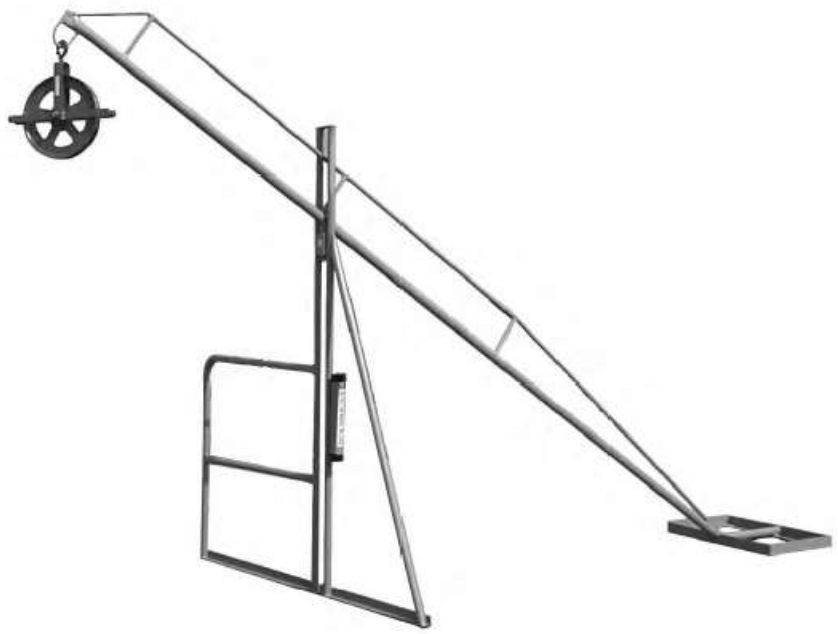

REFERENCES:

Form F-07-3 Hoisting Daily Pre-use Inspection

Please contact Safety Coordinator @ 506-576-6683, if you have any questions regarding what is expected for the procedure or for clarification

The information contained in this publication is intended for general use and may not apply to every circumstance. It is not a definitive guide to government legislation and does not relieve persons using this publication from their responsibilities under the Workplace Safety and Health Act or applicable legislation. The appropriate regulations and statutes should always be consulted and adhered to. Atlantic Roofers Limited/North Shore Roofing Ltd. and its affiliates do not guarantee the accuracy of, nor assume liability for the information presented here.

General

Protecting workers from injuries associated with the set-up and handling of hoisting apparatuses.

Hazards Present

• Cuts / Bruises	• Muscle Strain	• Fall from Height
• Death	•	•

Protective Mechanisms

• ERP (Emergency Response Plan)	• Safe Work Practices/Procedures	• Manufacturers Specifications
• PPE	• Training	•

Equipment / Tools Required

• Rear leg assembly	• Front frame assembly	• Trolley rail
• Counterweights	• Hitch pins / Fasteners	• Hooks/Slings/Shackles

Do

- DO make sure operators are trained before using this equipment
- DO read and thoroughly understand the manufacturer's instruction manual
- DO establish individual responsibilities and method of communication prior to setting up
- DO inspect all equipment before use
- DO wear heavy leather gloves when handling wire rope
- DO use fall protection when handling loads at the roof edge
- DO use tag lines to control loads
- DO check the hoist periodically during operation
- DO keep all body parts clear of moving parts

Do Not

- DO NOT use hoist structure to anchor life lines, worker's harness or other attachments
- DO NOT allow unauthorized personnel in the hoisting area
- DO NOT hoist in an open doorway
- DO NOT exceed the rated load capacity
- DO NOT operate while under the influence of drugs, alcohol or medication
- DO NOT climb on the hoist, use only a step ladder. Do not use an extension ladder
- DO NOT allow anyone under a raised load
- DO NOT attempt to make adjustments while the hoist is being operated
- DO NOT allow any person to ride on the hoist

Procedure

1) **Conduct a pre-starting inspection**
   a) Determine that the roof deck can support the intended loads in hoisting and material handling in addition to the weight of the counterweight.
   b) Ensure all structural members of the hoist are free of defects and damage that may affect the integrity of the hoist.
   c) Read the safety labels for warning of potential hazards that can cause serious injury. If a label becomes hard to read consult with your supervisor to have it replaced.
   d) Thoroughly read and understand the manufacturer's instruction manual.

2) **Before raising to roof level**
   a) Refer to Figure 3. Insert short hitch pin #6 through the trolley rail at point "B" to prevent the trolley support #12 from rolling during transport and handling.
   b) This pin should remain in place until the power unit is ready to be installed on hoist.
   c) Hoist installation and setup cannot proceed until all necessary parts and equipment have been raised to the roof deck. Use a hoist beam, swing beam, or freight elevator for this purpose.

Procedure **(con't)**

3) Raising to the roof level

a) When raising the rear leg assembly to the roof, place it at least 25 feet from the roof edge.

b) When raising the front frame assembly, place it about 14 feet in front of the rear leg assembly but still at least 10 feet from the roof edge.

c) After raising the trolley rail to the roof, place it between the front and rear section.

4) Assembling the frame

a) Ensure the front frame and rear leg sections and the trolley rail section are placed in position for assembly well back from the roof edge.

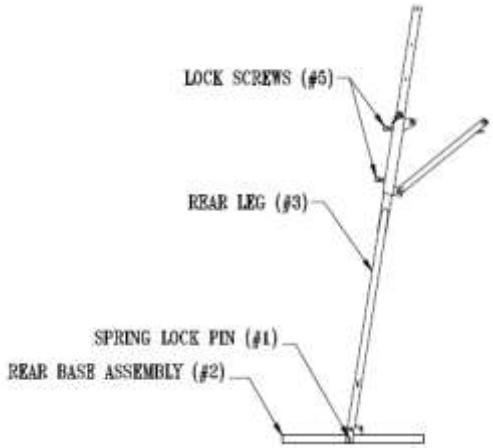

Figure 1
Rear Leg Assembly

b) Refer to Figure 1. Remove the two spring lock pins #1 on the rear leg base #2 and raise the rear leg #3 to an upright position.

c) Lock the rear leg in the upright position by inserting the #1 spring lock pins through the holes on the bottom of the rear leg into the rear leg base.

d) Move the socket on rear leg #3 to its lowest position by releasing the #5 lock screws.

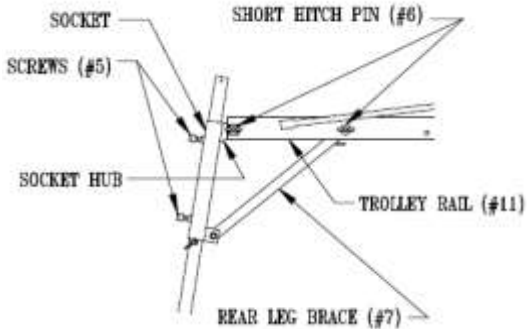

Figure 2
Assembling Trolley Rail and Rear Leg Sections

e) Refer to Figure 2. Slide rear leg brace #7 into the rear of the trolley rail assembly #11.

f) Align the matching holes in the trolley rail assembly and the rear leg socket hub and attach with a short hitch pin #6.

g) Raise the trolley rail assembly on the rear leg to align the matching holes in the rear leg brace #7 and the trolley rail assembly. Insert short hitch pin #6 through the matching holes.

Procedure **(con't)**

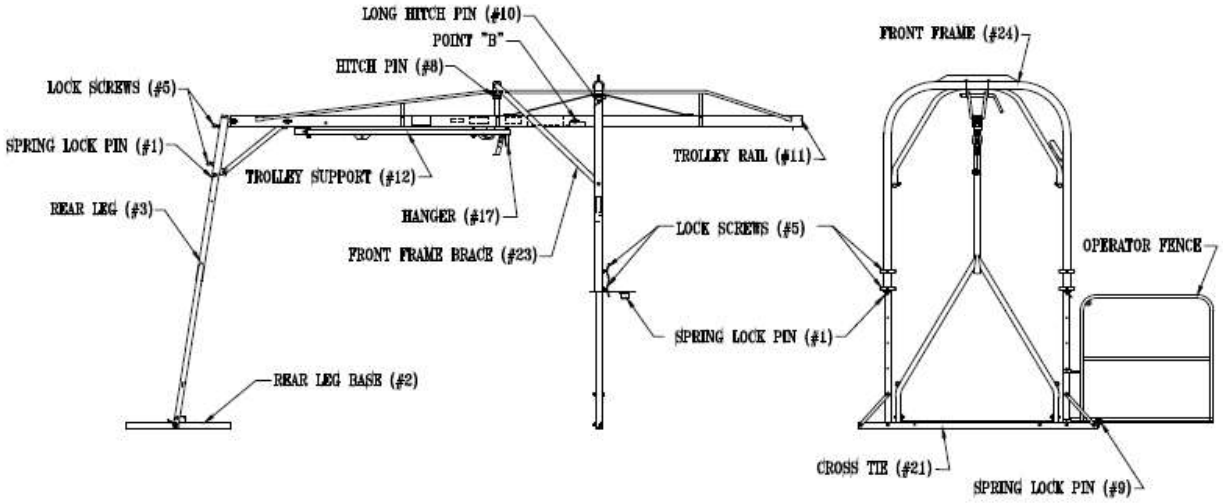

4) Assembling the frame (con't)

h) Refer to Figure 3. Raise the front frame brace #23 and tie temporarily to the top of the front frame assembly #24.

i) Release the spring lock pin holding the operator fence and raise front frame assembly to the upright position. Swing the operator fence 90° to help support the front frame during assembly.

j) Position the front frame assembly such that the trolley rail assembly front support is directly under the front frame.

k) Raise the trolley rail assembly and secure it to the front frame assembly by inserting hitch pin/hairpin #8 through the matching holes in the trolley rail assembly front support and the front frame pin tabs.

l) Untie front frame brace #23 and secure it to the trolley rail assembly with long hitch pin #10 through the matching holes in the trolley rail assembly rear supports.

m) Insert spring lock pin #1 into the rear leg and lower rear leg socket to rest on pin. Tighten lock screws #5. If not using track at maximum working height, insert pin above socket on rear leg.

Figure 3
Completed Frame Assembly

n) Raise the trolley rail assembly on the front frame legs until it is in the desired position (generally maximum height). The trolley rail should be slightly lower at the rear leg to facilitate pulling in loads. Insert a spring lock pin #1 into each leg and lower the front frame to rest on pins. Tighten lock screws #5.

o) Swing the operator fence outward to its protective wing position on the left side of the front frame assembly and pin into place with #9 spring lock pin.

p) Carefully move the entire unit to the roof edge by carrying from the front frame and rear leg assembly. The front frame assembly should be as plumb (vertical) as possible, resting on a secure base several inches in from the roof edge. Holes are provided in cross tie #21 for fastening to a 2 x 6 plank.

q) Mount 30 ballast blocks (1500 lbs) as counterweight on the rear leg base #2. Make sure it is properly nested. Tie the counterweight securely to the "D" rings on the rear leg assembly to prevent accidental removal. For equipment protection and safety of personnel, the counterweight ballast blocks must be prepared properly. **(See item 5 Ballast Block Assembly)**

r) Ensure that all lock screws are tightened and all lock pins are inserted.

Procedure **(con't)**

5) Ballast block assembly

a) Before using the ballast blocks, they must be filled with the proper amount of concrete. Refer to Manufacturer's instruction manual for procedure.

6) Mounting the power unit to the hoist

a) When lifting the power unit, the following precautions must be observed:

i. Be sure of your footing.

ii. Bend your knees and lift with your legs.

iii. Hold the equipment section close to your body when lifting.

b) When mounting the power unit, have 4 people lift the unit and slide the unit onto the trolley support. Pin the power unit to the trolley support at two places, use the spring lock pin in the rear trolley support hole and the hitch pin in the forward trolley support hole to attach the power unit support.

7) Reeving the cable

a) Before reeving the cable, lower the block bumper from its shipping position on the trolley support. Remove the spring lock pin, lower the block bumper, and re secure with the same pin.

b) Ensure sheaves turn freely.

c) Refer to Figure 4. For reeving with the two parts of a line, reeve the cable through block #13, then through block #19. Fasten the shackle and safety hook to the cable and attach safety hook to hanger #17. ENSURE THE SHACKLE AND HOOK HAVE A RATED CAPACITY OF AT LEAST 1000 LBS AND ARE IN GOOD CONDITION.

d) For single line operation, reeve the cable through block #13 and fasten the shackle and safety hook to cable.

NEVER EXCEED THE RATED LOAD CAPACITY OF 500 LBS FOR SINGLE LINE OPERATION OR 1000 LBS FOR DOUBLE LINE OPERATION. THE RATED LOAD CAPACITY IS THE MAXIMUM LOAD WHICH SHOULD EVER BE APPLIED TO THE HOIST. RATED LOAD CAPACITY IS FOR STRAIGHT LINE PULL; AVOID SIDE LOADS, SHOCK LOADS, AND SUDDEN STOPS.

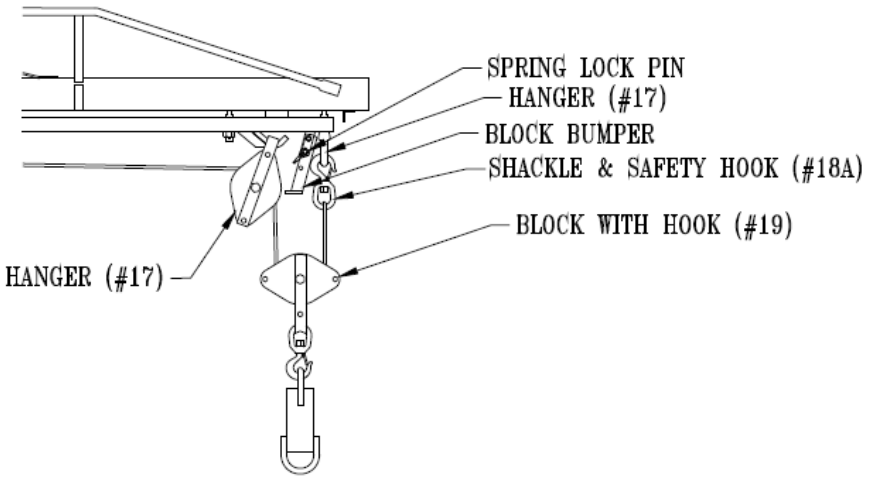

Figure 4
Reeving With Two Parts of Line

Procedure **(con't)**

8) Raising and lowering the load

a) The operator must remain behind the operator fence while using the hoist.

b) Before lifting, secure the load from shifting and insure the safety latch on the hook is not supporting any load. Use tag lines to control all loads. Never hoist over an open doorway.

c) Put the throttle in the slow position when starting and stopping the engine. This permits a warming and cooling period. Know how to stop your power unit quickly in case of emergency. Consult the engine manual for detailed operation of engine controls.

d) Close the choke to start a cold engine. Open choke slowly after engine starts. The choke must be open during normal operation or when starting a warm engine.

e) Start the engine and allow to warm up. Insure the valve control lever is in neutral. This lever is spring returned to neutral whenever the handle is released.

f) IF ENGINE OR MOTOR STALLS OR FAILS ON POWER UNIT, RELEASE CONTROL LEVERS IMMEDIATELY TO PREVENT LOAD FROM FALLING.

g) To raise a load increase the engine speed and pull the control lever up. Release the control lever when the load reaches the desired height. Pull the trolley support back and lowering the load onto the roof.

h) As additional layers of cable are wound onto the drum, the lifting speed increases but the lifting capacity decreases.

i) To lower a load, raise the load and slide the trolley support to its forward position. Push the control lever down to lower the load.

j) When lowering the load, gradually decelerate the lowering speed as it nears the ground.

k) Always raise and lower loads smoothly. Avoid sudden starts and stops.

l) Make a few "dry runs" (without load, but with ballast) to become familiar with operation, controls, and power unit and to test hoisting clearance. Always maintain 10-20 pounds of cable tension with a cable weight. Do NOT attempt to make any equipment adjustments during operation.

9) Hand Signals - *See SWP # 21 Hoisting – Hand Signals

a) All persons must be familiar with hand signals.

10) Disassembly – Rewinding the Cable

a) Ensure that all lifting tension has been removed from the cable.

b) Run trolley support #10 to the extreme rear and insert hitch pin #12 into the rear hole of the rail.

c) Remove safety hook from hanger #20. Unfasten the shackle and safety hook from the cable.

d) Tie a safety line at least 5 feet long to the cable end to prevent any accidental drawing of the operator's hand into the winch during rewinding.

e) Start the power unit and operate the winch to rewind the cable first through block #22 and then through block #13. Insure that the cable is rewinding evenly on the drum.

f) As the cable end approaches the drum, handle the cable only by the safety line described in Step d.

g) When the cable end reaches the winch, shut off the power unit and remove the safety line. Safely anchor the cable end for convenient access when preparing to lower the power unit to the deck or ground.

h) Return the block bumper to its shipping position by removing the spring lock pin, raising the block bumper, and re-securing with the same pin.

11) Removing the power unit from hoist

a) When removing the power unit, have four people support the unit while unfastening it from the trolley support at two places as described in Step 6. Carefully lower the unit to the deck observing the lifting precautions.

Procedure **(con't)**

12) Disassembling the frame

a) NEVER DISASSEMBLE THE FRAME NEAR A ROOF EDGE. ANY ACCIDENT NEAR A ROOF EDGE CAN CAUSE SERIOUS PERSONAL INJURY OR DEATH.
b) Ensure that the hoist is not supporting any load before proceeding.
c) Untie the rope securing the ballast blocks in the rear leg base. Remove the ballast blocks and place them where they will not impede dismantling procedures.
d) Remove the crosstie #5 from its 2"x 6" lumber mounting and unfasten the mounting from the supporting wall.
e) Move hoist assembly at least 10 feet away from the roof edge.
f) Release the spring lock pin holding the operator fence and swing the fence 90º to help support the front frame during disassembly.
g) Remove the hitch pin #12 that pins the rear leg brace to the trolley rail assembly.
h) Loosen lock screws #14 on front frame assembly. Raise the assembly off the spring lock pins in the front frame legs. Remove these pins and carefully lower the front frame assembly. Tighten lock screws #14.
i) Loosen lock screws #14 on rear leg socket. Raise the socket off the spring lock pin in the rear leg. Remove this pin and carefully lower the rear leg socket.
j) Unfasten the front frame brace from the trolley rail assembly by removing long hitch pin #19. Raise the front frame brace and tie it to the top of the front frame assembly #2.
k) Unfasten the trolley rail assembly from the front frame assembly by removing hitch pin/hairpin #28.
l) Unfasten the trolley rail assembly from the rear leg socket by removing hitch pin #12. Carefully lower the trolley rail assembly to the deck.
m) Remove the #16 spring lock pins from the holes on the bottom of the rear leg. Then lower the rear leg and reinstall these pins on the rear leg base.
n) Swing the operator fence inward to its shipping position between the front frame legs and pin into place with a spring lock pin.

13) Removing parts from deck

a) Use a hoist beam, swing beam or freight elevator to lower the disassembled parts of the hoist to the ground.
b) Safely secure the hoist parts on the transporting medium without overloading before lowering to the ground

14) Maintenance

a) Only authorized, trained personnel should perform maintenance.
b) Except for maintenance that cannot be done otherwise, bring the load to its lowest position when working on any part of the hoist.
c) Shut down and lock out the power unit to prevent accidental start-up.

REFERENCES:
Form F-07-3 Hoisting Daily Pre-Use Inspection

Please contact Safety Coordinator @ 506-576-6683, if you have any questions regarding what is expected for the procedure or for clarification

The information contained in this publication is intended for general use and may not apply to every circumstance. It is not a definitive guide to government legislation and does not relieve persons using this publication from their responsibilities under the Workplace Safety and Health Act or applicable legislation. The appropriate regulations and statutes should always be consulted and adhered to. Atlantic Roofers Limited/North Shore Roofing Ltd. and its affiliates do not guarantee the accuracy of, nor assume liability for the information presented here.

General

Protecting workers from injuries associated with the set-up and handling of hoisting apparatuses.

Hazards Present

• Cuts / Bruises	• Muscle Strain	• Pinch Points
• Falling Objects	•	•

Protective Mechanisms

• ERP (Emergency Response Plan)	• Safe Work Practices/Procedures	• Manufacturers Specifications
• PPE	• Training	•

Equipment / Tools Required

• Ladder	• Nuts/Bolts/Pins	• Load ties
• Motor Unit	• Leather Gloves	• Track Support (if required)

Do

- DO make sure operators are trained before using this equipment
- DO read and thoroughly understand the manufacturer's instruction manual
- DO establish individual responsibilities and method of communication prior to setting up
- DO inspect all equipment before use
- DO wear heavy leather gloves when handling wire rope
- DO use fall protection when handling loads at the roof edge
- DO tie ladder to the roof to prevent slipping
- DO check the hoist periodically during operation
- DO keep all body parts clear of moving parts

Do Not

- DO NOT use hoist structure to anchor life lines, worker's harness or other attachments
- DO NOT allow unauthorized personnel in the hoisting area
- DO NOT set up near power lines
- DO NOT exceed the rated load capacity
- DO NOT operate while under the influence of drugs, alcohol or medication
- DO NOT climb on the hoist, use a ladder.
- DO NOT allow anyone under a raised load
- DO NOT hoist in an open doorway
- DO NOT allow any person to ride on the hoist

Procedure

1) **Conduct a pre-starting inspection**
   a) Determine that the roof deck can support the intended loads in hoisting and material handling.
   b) Ensure hoisting operations will clear all power lines and obstructions.
   c) Ensure hoisting area is secured from all unauthorized personnel.
   d) Inspect the wire rope for signs of wear, damage or pinching. Replace if required.
   e) Ensure the ladder members of the hoist are free of defects and damage which may affect the integrity of the hoist.
   f) Ensure all shackles have a rated load capacity of at least 1000 lbs and are in good condition.
   g) Ensure the power unit has been properly maintained.
   h) Inspect the winch drum to make sure that the cable is wound smoothly with no crossovers.
   i) Read the safety labels for warning of potential hazards that can cause serious injury. If a label becomes hard to read consult with your supervisor to have it replaced.
   j) Thoroughly read and understand the manufacturer's instruction manual.

Procedure **(con't)**

1) Assembly

a) It is important to have the correct length of ladder set-up and the proper angle for safe material handling. See Figure 1.

Hoist to Bearing Point "A"	Max. Horizontal Distance "B"	Hoist Length "C"
13 ½ ft	3 ft 4 in	16 ft
21 ½ ft	5 ft 4 in	24 ft
25 ft	6 ft 3 in	28 ft
29 ft	7 ft 3 in	32 ft
32 ft	8 ft	36 ft
39 ft	9 ft 9 in	44 ft

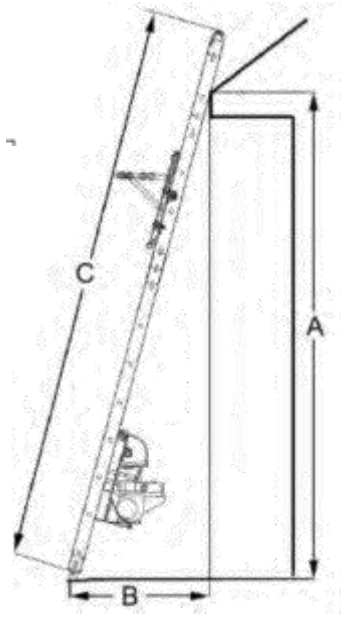

Figure 1

b) Attach the top end bracket to the top section of the assembled ladder. The Top Bracket can be bolted to the top of the ladder section. See Figure 2.

c) Splice the ladder sections together using the connection brackets. The connection brackets should be placed on the "outside" of the ladder section. See Figure 3.

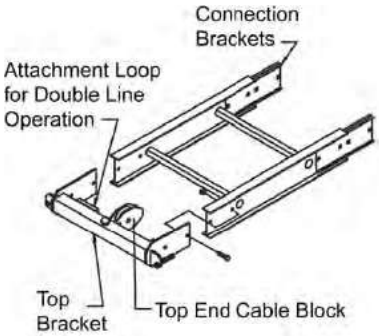

Figure 2

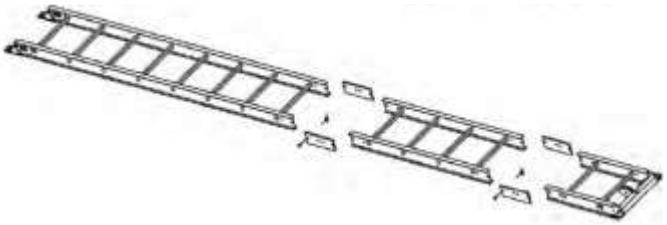

Figure 3

2) Installing the power unit

a) Remove the locking pin, unlocking the top locking arm.

b) Turn the Locking Handle so that the Locking Arm is in the unlock position.

c) Hang the ladder hoist power unit off of the 4th rung of the ladder.

d) Push the base of the ladder hoist inward, having the back of the power unit flush to the 2nd and 3rd rungs, as shown in Figure 4.

e) Turn the locking handle clockwise. This will push the top locking arm down and tighten the hoist power unit into the frame.

f) Reinsert the locking pin into place.

Procedure **(con't)**

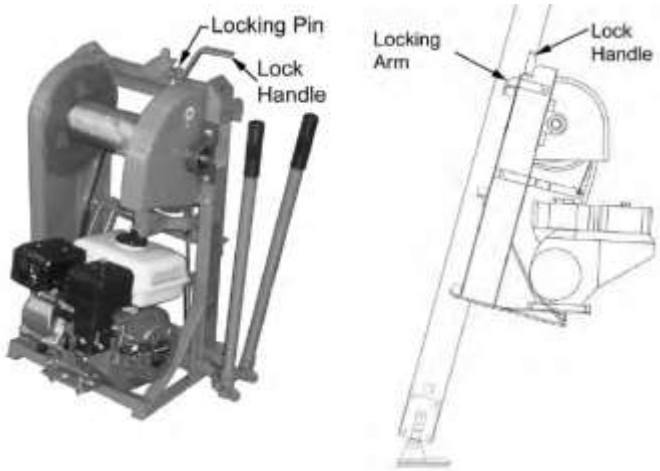

Figure 4

1) Rigging the cable (See Figure 5 & 5a)

a) **SINGLE CABLE Configuration** allows for faster loading of materials than the double line set-up and has ***reduced*** capacity. It is the most common system for setting up a Ladder Platform Hoist.

i) Loop the cable from the power unit up through the top end cable block and return and attach it to the carriage connection point using the enclosed shackle.

b) **DOUBLE CABLE Configuration** allows for an increased amount of material to be lifted at ***half*** the travel speed.

i) The cable must be run through the top cable block, down to a second block connected at the connection point on the carriage.

ii) The cable is then returned and fastened to the top bracking using the enclosed shackle.

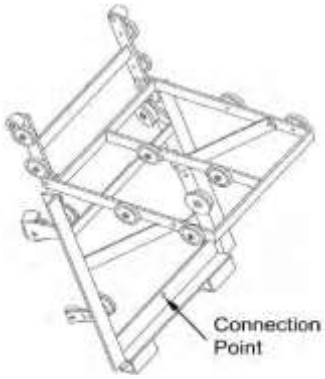

Figure 5 **Figure 5a**

2) Operating the Hoist

a) Before starting the engine, refer to the motor operating instructions for starting, oil and gasoline specifications.

b) Start the engine and adjust the throttle so that the engine runs at idle speed. The operator should make a trial run with the hoist to ensure that the engine, brake and clutch systems are working. The test shall be done while the carriage assembly is NOT loaded with material.

c) After completing the trial run, return the carriage assembly to the base position and load the hoisting carriage with material.

d) Material should be placed flat and evenly at the center of the carriage platform.

DO NOT EXCEED THE POSTED HOIST WEIGHT LIMIT

Procedure **(con't)**

5) Operating the Hoist (con't)

a) Manually increase the engine speed to full throttle.

b) With the engine at full throttle, slowly lift both the brake and clutch handles. Pressure on both handles must be maintained throughout the upward travel of the carriage assembly.

c) Once the carriage starts its upwards travel do not stop its motion until it reaches the top bracket.

Note: *Should you stop the carriage in mid climb, the brake will hold the load. Do not return the loaded carriage to the ground. Reapply pressure on the brake and clutch handles and complete the hoisting. The hoist is designed for the lifting, not lowering of loads*.

6) Once the load is discharged

a) Slowly lift the brake control handle, allowing the empty carriage to return to the loading position.

b) CAUTION: Upon releasing the brake, the carriage will free fall. Allow the carriage to lower about 12" at a time as it descends by releasing the brake action slowly and at steady intervals.

7) Changing the hoist cable

The condition of the hoist cable should be constantly monitored by the hoist operator. When the cable strands begin to split apart or fray, the cable should be replaced immediately.

a) Release the brake and completely unspool the cable from the hoist drum.

b) Remove the retaining bolt holding the cable onto the hoist drum.

c) Install the replacement cable using the provided bolt.

d) Turn the drum and spool on the cable. If you are not sure of the direction in which the cable should be spooled, activate the engine and turn the drum for a single rotation.

8) Disassembly and storage

a) After stopping the engine, wait for all moving parts to stop, and for the engine to cool before disassembling.

b) Disconnect the spark plug wire from the plug.

c) Never store the engine in any enclosure before cooling.

d) Do not store the power unit with fuel in its tank in any enclosure where flames or sparks may be present.

e) Store the power pack unit upright and hang the ladder parts from a side wall to prevent damage.

9) Changing the hoist cable

The brake is designed to open, and release completely when the brake arm is lifted. Before operating the hoist under load, the brake should be checked with the carriage in the unloaded position to ensure the brake releases and engages safely.

NEVER APPLY OIL TO THE BRAKE DRUM OR PAD, complete brake failure can result.

10) Maintenance

a) Only authorized, trained personnel should perform maintenance.

b) Shut down and lock out the power unit to prevent accidental start-up.

c) Consult manufacturer's instruction manual for clutch adjustment.

REFERENCES:

Form F-07-3 Hoisting Daily Pre-Use Inspection

Please contact Safety Coordinator @ 506-576-6683, if you have any questions regarding what is expected for the procedure or for clarification

The information contained in this publication is intended for general use and may not apply to every circumstance. It is not a definitive guide to government legislation and does not relieve persons using this publication from their responsibilities under the Workplace Safety and Health Act or applicable legislation. The appropriate regulations and statutes should always be consulted and adhered to. Atlantic Roofers Limited/North Shore Roofing Ltd. and its affiliates do not guarantee the accuracy of, nor assume liability for the information presented here.

General

Rigging looks like an easy operation that requires no particular skill or experience. However, many workers have lost fingers, hands or suffered more serious injuries because they thought, “anybody can do that”.

Hazards Present

• Pinch Points	• Crush Injuries	• Falling Objects
• Death	• Damage to Equipment/Material	•

Protective Mechanisms

• ERP (Emergency Response Plan)	• Safe Work Practices/Procedures	• Manufacturers Specifications
• PPE	• Training	•

Equipment / Tools Required

• Slings	• Shackles	• Clips & Clamps
• Hand Signals	• Hooks	• Tag Lines

Do

- DO ensure you are competent in rigging procedures
- DO be acquainted with hand signals
- DO inspect all components, including hardware before use
- DO be aware of pinch points
- DO know what hardware to use. All fittings must be of adequate strength for the application
- DO ensure you are in view of operator
- DO ensure you utilize a tag line
- DO ensure hoisting hooks are equipped with safety catches
- DO ensure load is centred
- DO be aware of the direction of the swing of load

Do Not

- DO NOT use hoist structure to anchor life lines, worker’s harness or other attachments
- DO NOT allow unauthorized personnel in the hoisting area
- DO NOT walk under suspended loads
- DO NOT lift when the visibility of riggers or hoist crew is impaired by snow, fog, rain, darkness or dust
- DO NOT exceed the rated load capacity
- DO NOT operate while under the influence of drugs, alcohol or medication
- DO NOT overload a rope
- DO NOT carry out hoisting or rigging when the winds create hazards for workers and the general public
- DO NOT attempt to repair slings. Replace if worn or damaged
- DO NOT drag a rope along the ground or over rough or sharp edges
- DO NOT use cold ropes

Procedure

1) **Conduct a pre-starting inspection**
   a) Ensure that the maximum load rating of rigging components as recommended by the manufacturer are not exceeded.
   b) All rigging, hooks and components will be checked for excessive wear and damage prior to use, after one month or more of disuse and once during every year it is in operation.

Procedure **(con't)**

1) Conduct a pre-starting inspection (con't)

c) One member of the crew will act as the designated signalperson. Signaller must be readily identifiable to the operator and will direct the movement of load by a well understood distinctive code of hand signals. Two-way electronic communication is an acceptable alternative.

d) The signalperson will review the signals to be used with the crane operator. *See SWP # 21 Hoisting – Hand Signals.*

e) Damaged rigging must be clearly tagged "Out of Service", removed from the work area and either repaired or replaced.

2) Signalperson

a) The signalperson is the only one to signal for a lift and must be careful not to order a move until he has received the "all ready" signal from each member of the crew

b) Be sure you are in the clear before you give an "all ready" to the signalperson.

c) Watch out for the roll or swing of the load. Anticipate the direction of the swing or roll and work away from it.

3) Rigger

a) Be sure your hand is clear of pinch points.

b) Stay away from stacked material that may be knocked over by a swinging load.

c) Never stand under the load, and keep from under the boom as much as possible.

4) Lifting a load

a) Use tag lines to control the panels with one (1) person on each side.

b) Look over the location where the load is to be set. Remove unnecessary blocks or other objects that might fly up if struck by the load.

c) When lowering or setting the load, be sure your feet and all other parts of your body are out from under the load.

d) Set the load down easily and slowly so that if it rolls on the blocking, it will be a slow shift that you can get away from.

5) Synthetic web slings

Synthetic web slings are a good choice where highly finished parts or delicate equipment must be protected from damage. The synthetic material has stretch and flexibility to help the slings mold to the shape of the load, gripping securely, while cushioning and absorbing shock more than a wire rope or chain.

a) They are lightweight and very easy to handle.

b) They are non-sparking, non conductive and can be used safely in explosive atmospheres.

c) Synthetic slings are typically not affected by grease, oil, moisture and certain chemicals. Check with the manufacturer to determine which conditions apply to the exact material you are using.

d) Synthetic web slings are easily cut and have poor abrasion resistance when compared with chain and wire rope slings. Protect webbing from sharp corners, protrusions, or abrasive surfaces.

e) Protect slings from heat sources such as steam pipes, open flame and welding splatter.

f) Nylon slings are damaged by acids, but resist caustics.

g) Polyester slings are damaged by caustics but resist acids.

h) Sunlight, moisture, and temperatures above 90°C (194°F) damage both nylon and polyester slings.

i) Use slings made of the right material for the job.

j) Check the manufacturers' slings for their code number and the rated capacity. Reference charts showing slings and hitch rated capacities are available from manufacturers.

k) Inspect slings before using them and keep an inspection record for each one.

Procedure **(con't)**

6) Selecting the proper wire rope sling

a) Follow the manufacturers' charts and tables on sling types, angles, and rope diameters and select a proper sling which suits the load and the slinging method that you are going to use. Sling types can be endless, single, two, three or four leg.

b) The sling must be both long enough and strong enough for the load and the slinging method.

c) Follow the manufacturers' recommendations on clips and clamps of suitable size and design for ropes of different size.

d) Consult the manufacturer or supplier when wire rope slings come into contact with acids or chemicals.

e) Attach using methods outlined by the manufacturer.

f) Remember that a socket and clip fittings used to attach the rope determine the sling's load limit. Fittings have 75% to 100% of the breaking load of the rope.

g) Remember that the safe load limit of a sling also depends on the hitch (method of applying a sling to the load). The type of hitch depends on the kind of material to be lifted, the safe load limit of the sling, the presence (or absence) of lugs on the load, the headroom, and other factors. Check with the manufacturer's instructions.

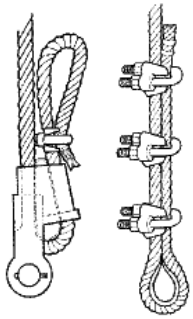

Figure 1

7) Use wire rope slings safely

a) Be sure you know the correct use of the equipment, the slinging procedures and the sling strength factors to be applied before lifting.

b) Use wire rope slings at rated limits.

c) Check the manufacturer's chart for sling properties.

d) Examine slings for wear, fatigue, crushed or broken wires, kinking, ballooning or "bird-caging", heat damage, etc. Check both before and after using slings to detect any damage or defects.

e) Attach the sling securely to the load and appliance and position hooks to face outwards.

f) Inspect and tighten fittings regularly.

g) Center the sling load to prevent the load from shifting suddenly and causing a high impact load.

h) Ensure that the load is free to be lifted.

i) Reduce rope stress with slow starts and stops.

j) Keep wire rope slings well lubricated and inspect them often. Use non-acidic lubricants.

k) Store slings on racks in a clean, dry place and protect from corrosion.

8) Things to avoid when using wire rope slings

a) Do not bend slings around sharp edges. Protect them by using corner saddles, padding, or wood blocks.

b) Do not force, hammer or wedge slings or fittings into position. They must fit freely.

c) Never join wire rope slings made from different lays of rope together as it can seriously affect the lifting capacity.

d) Do not use slings with knots.

e) Never attempt to shorten or tie wire rope slings.

f) Never shock load wire rope slings.

g) Never shock load wire rope slings.

h) Do not use a single leg hitch on a load that cannot be controlled. Rotation of a load can undo the wire rope strands and weaken the rope.

9) Things to avoid when using slings

a) Do not drag slings across floors or other abrasive surfaces.

b) Do not drop slings with metal fittings.

Procedure **(con't)**

9) Things to avoid when using slings (con't)

c) Do not set loads down on top of slings.

d) Do not pull slings from under loads when the load is resting on the sling.

e) Do not weld anything hung from a sling.

f) Do not lengthen or shorten slings by tying knots.

g) Do not place stitch patterns (laps) on hooks, around sharp corners, or at choker bearing points.

10) Damage that makes a synthetic web sling unusable

a) Increased stiffness of sling material.

b) Acid or caustic burns.

c) Melted, burned or weld spatter damage.

d) Holes, tears, cuts, snags.

e) Broke or worn stitching.

f) Broke or worn stitching.

g) Knots in any part of the sling.

h) Crushed webbing or embedded particles.

i) Bleached sling colour.

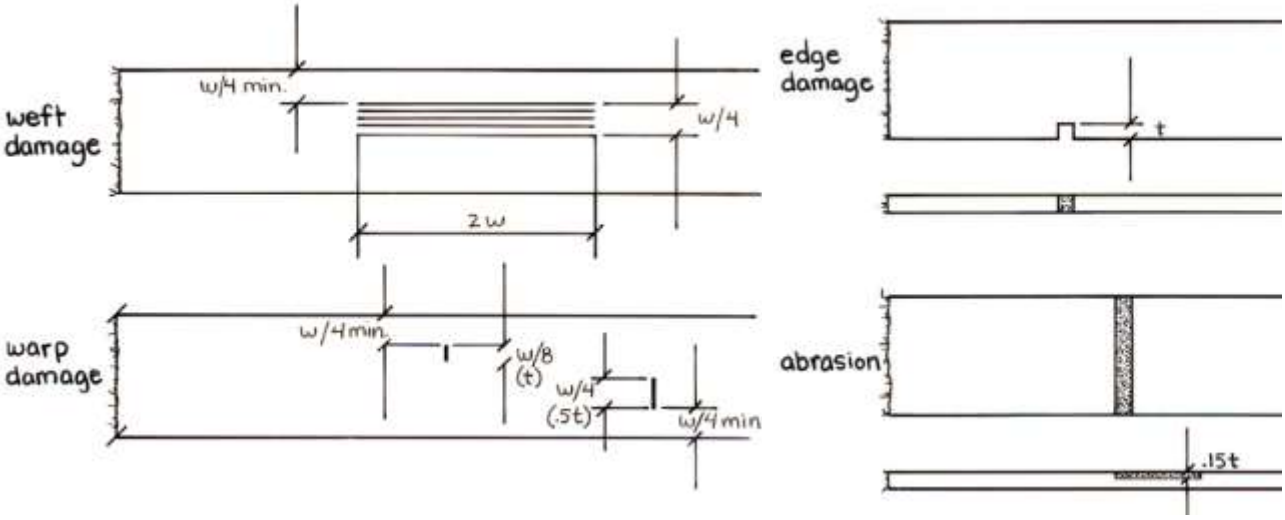

Figure 2
Examples of Synthetic Web Sling Rejection Criteria

REFERENCES:
Form F-07-4 Rigging Daily Pre-use Inspection

Please contact Safety Coordinator @ 506-576-6683, if you have any questions regarding what is expected for the procedure or for clarification

The information contained in this publication is intended for general use and may not apply to every circumstance. It is not a definitive guide to government legislation and does not relieve persons using this publication from their responsibilities under the Workplace Safety and Health Act or applicable legislation. The appropriate regulations and statutes should always be consulted and adhered to. Atlantic Roofers Limited/North Shore Roofing Ltd. and its affiliates do not guarantee the accuracy of, nor assume liability for the information presented here.

Ladders – Extension Ladder set-up & Use

JP # 29

General

The majority of all construction trades are required to use ladders of one type or another on most construction sites. Through improper use, poor work habits or inadequate training and supervision, a significant number of workers are seriously injured, permanently disabled or killed each year.

Hazards Present

• Ergonomic – force/posture	• Pinch Points	• Energy – gravity/kinetic

Protective Mechanisms

• PPE	• Safe Work Practices/Procedures	• Manufacturers Specifications

Equipment / Tools Required

• Extension Ladder	• Gloves	• Non-slip Boots
• Helper if needed	• Rope for Tying Ladder	•

Do

- DO read and follow the manufacturer's instructions and warning labels
- DO wear appropriate personal protective equipment such as safety footwear (with heels and slip-resistant soles) and safety glasses
- DO manufactured portable ladders must be CSA approved
- DO only one person is permitted to be on a ladder at any time
- DO keep ladders away from electrical wires
- DO ensure that the work area is clear of debris
- DO if you become dizzy on a ladder you should drape your arms over a rung and rest your head against the ladder. Climb down slowly
- DO wear fall protection equipment if you are working 3 metres (10 feet) or more above the ground

Do Not

- DO NOT use a ladder if you feel drowsy or unwell
- DO NOT overreach while on a ladder. Move a ladder when needed
- DO NOT use a ladder as a brace or support for a work platform or plank
- DO NOT use a ladder on slippery surfaces without securing the ladder's feet
- DO NOT use a ladder on soft ground; the legs could sink into the ground
- DO NOT paint a wooden ladder
- DO NOT carry objects in your hands while climbing a ladder. Hoist materials or use a tool belt
- DO NOT place a ladder on a box, cart or other unstable surfaces
- DO NOT use a ladder in a passageway, doorway, driveway or other location where a person or vehicle could hit it. Set up suitable barriers or lock doors
- DO NOT work or climb higher than the fourth rung from the top of a ladder
- DO NOT extend the top section of a ladder from above or by "bouncing" on it

Procedure

1) **Selection and inspection**
   a) Wear appropriate personal protective equipment.
   b) Use a ladder that is designed for the task. Check the ladder's length, strength/grade and type/use.
   c) Use a fiberglass ladder when doing electrical work or when working in close proximity to electrical equipment.

Procedure (con't)

1) Selection and inspection (con't)

d) Inspect the ladder prior to each use for the following;

i) Damaged or worn non-slip feet.
ii) Loose nails, screws, bolts or nuts.
iii) Rotted, decayed or warped rails on wooden ladders.
iv) Cracked or exposed fiberglass on fiberglass ladders.
v) Cracked, split, worn or broken rails, braces, steps or rungs.
vi) Sharp edges on rails and rungs.
vii) Rough or splintered surfaces.
viii) Corrosion, rust, oxidization and excessive wear.
ix) Twisted or distorted rails (check by sighting along the rails).
x) Missing identification labels.
xi) Loose, broken or missing extension locks
xii) Defective locks that do not seat properly when extended.
xiii) Sufficient lubrication of working parts.
xiv) Defective cords, chains or ropes.

e) Do not use a broken or unsafe ladder, attach a warning tag, take it out-of-service and advise your supervisor.

f) Use a fiberglass ladder when doing electrical work or when working in close proximity to electrical equipment.

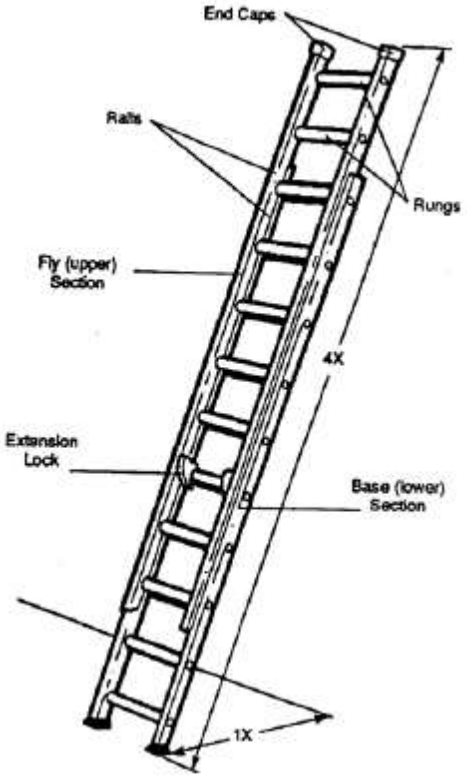

Figure 1

2) Operation

a) Get help when handling a heavy or long extension ladder.
b) Check for overhead electrical wires or other hazards before setting up the ladder.
c) Clear the area around the base of the ladder of debris and other objects.
d) Set up barricades and warning signs wherever necessary.
e) Place the ladder on a firm, level surface and ensure it is secure.
f) Erect the ladder so the upper section rests on (in front of) the bottom section (i.e. the bottom section faces the wall or supporting surface).
g) **Two workers are required to set up a ladder weighing more than 25 kg (55 lb) or where conditions complicate the task**.

h) **Method for TWO (2) workers setting up the ladder**

i) Lay the ladder on the ground close to the intended location.
ii) One worker braces the ladder's base with his/her feet.
iii) The other worker grabs the top rung with both hands, raises the top end of the ladder over his/her head and walks toward the base of the ladder. Grasp the centre of the rungs.
iv) Move the erect ladder to the desired location. Lean it forward against the resting point.

i) **Method for ONE (1) worker setting up the ladder**

i) Place the bottom of the ladder firmly against the base of the wall or stationary object.
ii) Lift the top of the ladder and push upwards to raise the ladder to a vertical position.
iii) Transfer the ladder to its required position when it is erect.
iv) Keep the ladder upright and close to your body with a firm grip.

Procedure (con't)

2) Operation (con't)

j) Place the ladder's feet so that the horizontal distance between the feet and the top support is 1/4 of the working length of the ladder. The ladder should be leaning at a 75 degree angle from the ground. (See Figure 2)

k) Raise and lower the ladder from the ground. Ensure that the locking ladder hooks are secure before climbing the ladder.

l) Erect the ladder so that approximately one metre (3 ft) extends above a landing platform. (See Figure 3)

m) **The first person up the ladder will tie the top of the ladder at support points. A second person will hold the ladder steady. Install eye screws out of sight for tying the ladder if required.**

n) Maintain the minimum overlap of sections as noted on the ladder's label.

o) Brace or tie off the ladder near the base. If there is no structure to tie off to, use a stake. Leave the tie-off in place until the ladder is taken down. (See Figure 4)

p) If your boots are muddy then clean the soles before climbing the ladder. Avoid climbing with wet soles. Ensure your footwear is in good condition.

q) Face the ladder when climbing up or down. Keep your body centered between the side rails.

r) Maintain a firm grip. Use both hands when climbing. Grasp the rungs.

s) Maintain three point contact by keeping two hands and one foot, or two feet and on hand on the ladder at all times.

t) The method for lowering a ladder is the reverse of erecting it.

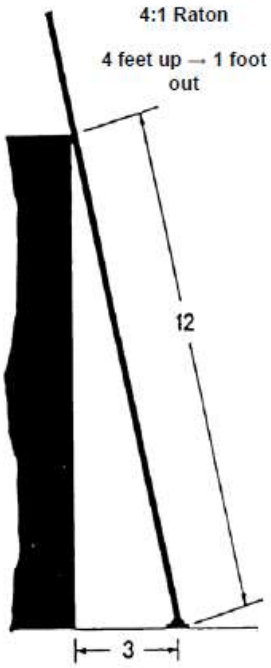

Figure 2

3) Storage and Maintenance

a) Clean a fiberglass ladder every three months. Spray it lightly with a clear lacquer or paste wax.
b) Protect a wooden ladder with a clear sealer or wood preservative.
c) Return ladders to the designated storage area after use.
d) Store ladders where they are protected from the weather.
e) Keep ladders clean and free of foreign materials.
f) Keep wooden ladders in a well-ventilated location, away from dampness and excessive heat.

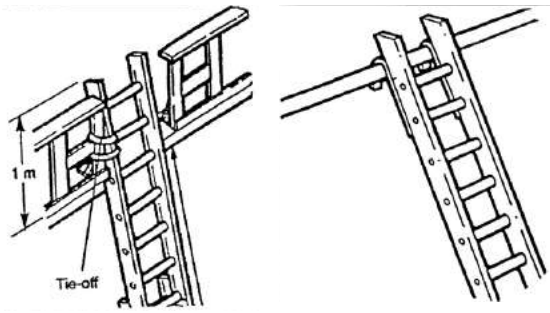

Figure 3
Ladders acceptably secured

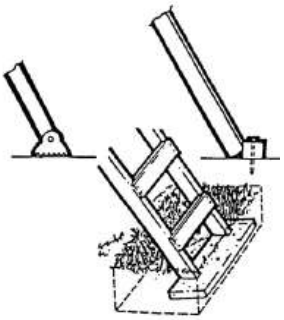

Figure 4
Securing at Base

Please contact Safety Coordinator @ 506-576-6683, if you have any questions regarding what is expected for the procedure or for clarification

The information contained in this publication is intended for general use and may not apply to every circumstance. It is not a definitive guide to government legislation and does not relieve persons using this publication from their responsibilities under the Workplace Safety and Health Act or applicable legislation.
The appropriate regulations and statutes should always be consulted and adhered to. Atlantic Roofers Limited/North Shore Roofing Ltd. and its affiliates do not guarantee the accuracy of, nor assume liability for the information presented here.

General

Effective hazardous energy control procedures will protect employees during machine and equipment servicing and maintenance where the unexpected energization, start up or release of stored energy could occur and cause injury, as well as while working on or near exposed de-energized electrical conductors and parts of electrical equipment.

Hazards Present

• Crushing Injuries	• Electrocution	• Being Thrown From

Protective Mechanisms

• PPE	• Safe Work Practices/Procedures	• Manufacturers Specifications

Equipment / Tools Required (as needed)

• Energy Isolating Device	• Tags	• Locks
• Chains	• Wedges	•

Do

- DO ensure lock-out devices are singularly identified. They shall be the only devices used for controlling energy and shall not be used for other purposes.
- DO ensure the lock-out device indicates the identity of the employee applying the device
- DO make sure lock-out is used when working on or near exposed de-energized electrical circuits/parts.
- DO ensure all machines/equipment be locked out to protect against accidental operation when operation could cause injury to personnel.

Do Not

- DO NOT attempt to operate any switch, valve, machine, equipment which is locked out
- DO NOT remove any lock-out device unless you are the person who applied it

Procedure

1) **Machine or Equipment Shutdown**
   a) All affected employees shall be notified that a lockout system is to be utilized and the reason for it, before the controls are applied.
   b) If the machine or equipment is operating, shut it down by normal stopping procedure. (Depress stop button, open toggle switch, etc.).

2) **Machine or Equipment Isolation**
   a) Physically locate and operate the switch, valve, or other energy isolating devices so that the equipment is isolated from its energy sources and apply adequate hardware.

3) **Lockout Device Application**
   a) Authorized employees shall lockout the energy isolating devices with assigned individual locks.
   b) Lockout devices shall be applied so that they will hold the energy isolating devices in a “Neutral” or “Off” position.
   c) Install a personal lock and completed **“DO NOT OPERATE”** tag on the locking device of the equipment, if so equipped. Sign and date the tags stating the reason for the disconnect.
   d) Turn off the power supply valves and disconnect the power supply hose. When it is not possible to install a lock, secure the circuit by another practical and safe means and attach a completed tag.
   e) If more than one person is working on locked out equipment, each person will attach his own lock and tag.

Procedure **(con't)**

4) Stored Energy

a) All stored or residual energy in rams, flywheels, springs, pneumatic, or hydraulic systems, etc. shall be blocked or dissipated. If there is a possibility of re-accumulation of stored energy, verification of isolation must be continued until servicing or maintenance is completed.

5) Verification of Isolation

a) Prior to starting work on machines or equipment that have been locked and after ensuring that no personnel are exposed, the authorized employee shall operate the push button or normal operating controls to verify that the appropriate equipment or machine has been de-energized and make certain it will not operate.

b) Check that the power supply is disconnected, if no lock out is possible. Use a voltage tester to check all electrical circuits. Ensure the tester is operational.

CAUTION: Return Operating Controls to the "Neutral" or "Off" Position after the Test.

c) The machine / equipment is now locked out. Servicing or maintenance may now occur.

6) Removal of Lockout Device

a) Before turning the power back on ensure that no one will be endangered by starting the equipment.

b) When the repairs are completed connect the hoses and/or remove locks and tags.

c) The equipment operator MUST be informed.

d) No one shall leave the property without removing his lock.

e) "DO NOT REMOVE ANOTHER PERSONS LOCK", promptly report any irregularities in the procedure to your supervisor.

f) A Supervisor upon complete investigation of the circumstances may remove a **"LOCK OUT"** and will take full responsibility for the action.

7) Uncompleted Jobs

a) Uncompleted jobs where the equipment is **"SAFE TO OPERATE"** follow step 6 a to 6 c.

b) Uncompleted jobs where equipment is **NOT SAFE TO OPERATE** a CLEARLY COMPLETED STATUS TAG MUST BE INSTALLED UNDICATING THE PROBLEM AND WHO TO CONTACT.

c) The equipment operator and the area Supervisor must be informed of the status of repairs.

Please contact Safety Coordinator @ 506-576-6683, if you have any questions regarding what is expected for the procedure or for clarification

The information contained in this publication is intended for general use and may not apply to every circumstance. It is not a definitive guide to government legislation and does not relieve persons using this publication from their responsibilities under the Workplace Safety and Health Act or applicable legislation.
The appropriate regulations and statutes should always be consulted and adhered to. Atlantic Roofers Limited/North Shore Roofing Ltd. and its affiliates do not guarantee the accuracy of, nor assume liability for the information presented here.

General

Whether lifting is an everyday job or an occasional task, lifting improperly can cause serious injury regardless of the weight of the object or the physical condition of the person lifting the object. Always follow proper lifting procedures to reduce the risk of injury. Being physically ready to do the job can further reduce the risk of injury. For example, doing a few basic exercises before starting work can warm up the body and prepare it for strenuous work.

Hazards Present

- Muscular Injuries
- Falling Objects
- Tripping

Protective Mechanisms

- PPE
- Safe Work Practices/Procedures
- ERP (Emergency Response Plan)

Equipment / Tools Required

- Back Support where continuous heavy lifting is required

Do

- DO tuck in the chin to keep the back as straight as possible while lifting
- DO lift with the strong leg muscles
- DO ask for help with the heavy, awkward items
- DO when possible, use mechanical equipment to move heavy items

Do Not

- DO NOT try to lift an item that is too heavy or awkward
- DO NOT use your back muscles to do lifting
- DO NOT twist your body while carrying an object
- DO NOT attempt team lifting without proper coordination

Procedure

1) Planning

a) Size up the load and check overall conditions.
b) Don't attempt the lift by yourself if the load appears to be too heavy or awkward.
c) Check that there is enough space for movement, and that the footing is good.
d) "Good housekeeping" ensures that you won't trip or stumble over an obstacle.

2) Lifting

a) Make certain that your balance is good.
b) Feet should be shoulder width apart, with one foot beside and the other foot behind the object that is to be lifted.
c) Bend (he knees; don't stoop.
d) Keep the back straight, but not vertical. (There is a difference. Tucking in the chin straightens the back.)
e) Grip the load with the palms of your hands and your fingers. The palm grip is much more secure. Tuck in the chin again to make certain your back is straight before starting to lift.
f) Use your body weight to start the load moving, then lift by pushing up with the legs. This makes full use of the strongest set of muscles.
g) Keep the arms and elbows close to the body while lifting.

Procedure **(con't)**

3) Carrying

a) Carry the load close to the body. Don't twist your body while carrying the load. To change direction, shift your foot position and turn your whole body.

b) Watch where you are going!

4) Lowering

a) To lower the object, bend the knees. Don't stoop.

b) To deposit the load on a bench or shelf, place it on the edge and push it into position.

c) Make sure your hands and feet are clear when placing the load.

Note: Make it a habit to follow the above steps when lifting anything-even a relatively light object.

5) Team Lifting

a) If the weight, shape, or size of an object makes the job too much for one person, ask for help.

b) Ideally, workers should be of approximately the same size for team lifting.

c) One individual needs to be responsible for control of the action to ensure proper coordination.

d) If one worker lifts too soon, shifts the load, or lowers it improperly, either they or the person working with them may be injured.

e) Walk out of step (do not keep your feet moving at the same time as your lifting partner).

6) Lifting Heavy Objects

a) Safe lifting of heavy items requires training and practice. For example, we've probably all seen a small person move heavy feed sacks with apparent ease.

b) The secret lies in taking the proper stance and grip.

c) When equipment is available, it should be used to lift and carry heavy objects.

d) Loaders, forklifts, hoists, carts, etc. are made for this purpose.

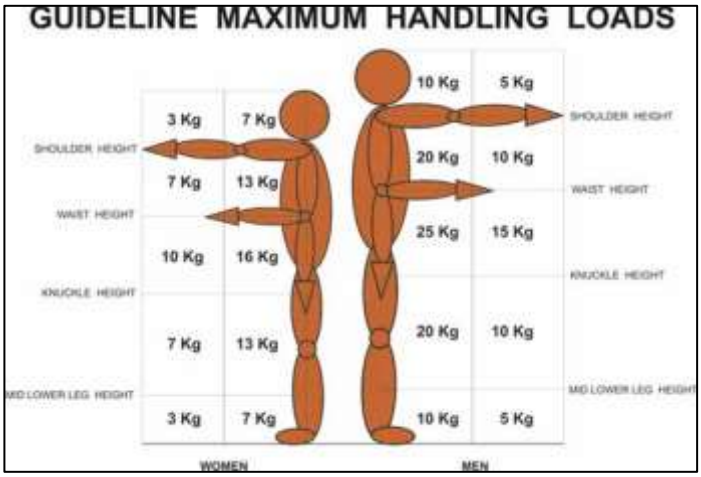

Please contact Safety Coordinator @ 506-576-6683, if you have any questions regarding what is expected for the procedure or for clarification

The information contained in this publication is intended for general use and may not apply to every circumstance. It is not a definitive guide to government legislation and does not relieve persons using this publication from their responsibilities under the Workplace Safety and Health Act or applicable legislation.
The appropriate regulations and statutes should always be consulted and adhered to. Atlantic Roofers Limited/North Shore Roofing Ltd. and its affiliates do not guarantee the accuracy of, nor assume liability for the information presented here.

General

It may be necessary to bend metal on the job site or in other company facilities. If done properly and with respect for company health and safety policies and procedures, the operation can be done smoothly and safely.

Hazards Present

• Cuts	• Pinch Points	• Eye Injury

Protective Mechanisms

• PPE	• Safe Work Practices/Procedures	• ERP (Emergency Response Plan)

Equipment / Tools Required

• Tape Measure	• Sheet Metal	• Safety Glasses / Gloves

Do

- DO practice good housekeeping
- DO ask for help with the heavy, awkward items

Do Not

- DO NOT over strain yourself
- DO NOT work without safety equipment

Procedure

1) Planning

a) Be sure to have the bending equipment, your tools and yourself in a safe place out of the way of danger.
b) Always wear the proper PPE as per company polices.
c) Check that there is enough space for movement, and that the footing is good.
d) "Good housekeeping" ensures that you won't trip or stumble over an obstacle.

2) Preparing to Bend

a) Put on PPE.
b) Confirm the gauge, color and type of metal needed to do the job.
c) Select the smallest possible piece of metal that is still large enough for the job. If the selected piece is too large to handle safely, get assistance.
d) Lay the metal out flat in a safe location.
e) Determine where slicing is required in order to cut the metal down to a manageable size.
f) Make necessary markings.

3) Slicing the Metal

a) Carefully insert the metal into the bender to the proper markings for slicing. (keep in mind that the slice will happen at approx. 1.5 inches from the bender's guide rail.)
b) Set cutting tool onto its rail system.
c) Using steady even pressure, slide the cutting tool along the rails, allowing it to slice through the metal.
d) Be sure that the side of the cut that is furthest from the bender is permitted to fall downward. With larger pieces of metal, you should be using two people at this point.
e) Once the slice is complete, pick up the piece of metal that has been cut off and is not secured in the bender and set it aside in a safe place.
f) Carefully remove the piece that is locked into the bender and set it aside in a safe place.
g) Continue repeating steps 2 through 13 until all necessary slicing is complete.

Procedure

4) Bending the Metal

a) Once all slicing is completed, move on to making required bends in the sliced pieces.
b) Select piece to be bent and lay it flat in a safe place to work.
c) Confirm correct bending specs.
d) Make necessary markings for bend locations.
e) Ensure bender is in the open position and slide the metal into the bender, aligning the marks were the bend is needed.
f) Clamp down the bender into the closed position.
g) Double check that the landmark markings are aligned properly.
h) Plant both feet securely on step.
i) If the gauge of the metal is such that it requires two people to bend it, both people must have at least one foot on the step each.
j) Firmly grasp the bender's handles and make the necessary bend.
k) Return the handles to the neutral position.
l) Place one hand on the bent piece of metal and one hand on the top handle.
m) Pull the handle towards yourself to unclamp the metal.
n) Repeat steps 16 through 27 until all necessary bends are made.

Please contact Safety Coordinator @ 506-576-6683, if you have any questions regarding what is expected for the procedure or for clarification

The information contained in this publication is intended for general use and may not apply to every circumstance. It is not a definitive guide to government legislation and does not relieve persons using this publication from their responsibilities under the Workplace Safety and Health Act or applicable legislation.
The appropriate regulations and statutes should always be consulted and adhered to. Atlantic Roofers Limited/North Shore Roofing Ltd. and its affiliates do not guarantee the accuracy of, nor assume liability for the information presented here.

Metal – Installing Flashings

JP # 33

General

It may be necessary to bend metal on the job site or in other company facilities. If done properly and with respect for company health and safety policies and procedures, the operation can be done smoothly and safely.

Hazards Present

• Cuts	• Falling Objects	• Fall from Roof

Protective Mechanisms

• PPE	• Safe Work Practices/Procedures	• ERP (Emergency Response Plan)

Equipment / Tools Required

• Power Tools (Drill)	• Caulking/ Caulking Gun	• Metal Flashings
• Fasteners	• Chalk Line	• Aviation Snips

Do

- DO ensure materials are stored securely so it doesn't blow away in winds
- DO inspect material on site for correct quantities, shape and damage.
- DO store pallets on a slight angle for drainage

Do Not

- DO NOT work with more than 1 piece of flashing at a time when windy
- DO NOT work near or at the roof edge without appropriate fall protection plan

Procedure

1) Planning

a) Be sure to coordinate a safe lay down area where materials can be hoisted to the roof.
b) Check all materials to ensure the correct quantities, shapes, color and that there is no damages.
c) Always wear the proper PPE as per company polices.
d) Always practice good housekeeping.
e) Ensure there is a Fall Protection Plan in place. (See section 2 - Form P-02-3 Fall Protection Plan)
f) Be sure there is a barrier or caution tape at the ground area below where you are working to warn others of potential falling objects.

2) Hoisting metal to the roof

a) Put on PPE.
b) Inspect hoisting equipment and follow appropriate Job Procedures JP #22 to JP #25 as required for the method being used to hoist.

3) Installing flashing

a) When working near or at the edge of the roof, be sure to follow the appropriate Job Procedure as required for Fall Protection.
b) When laying out pieces of metal flashing, ensure that the metal cannot blow off the roof.
c) When weather conditions are windy, work with one piece at a time.
d) Install metal flashings securely, never rely on the minimum requirements.
e) Practice good housekeeping. Clean up roof work area as well as on the ground where anything may have dropped.

Please contact Safety Coordinator @ 506-576-6683, if you have any questions regarding what is expected for the procedure or for clarification

The information contained in this publication is intended for general use and may not apply to every circumstance. It is not a definitive guide to government legislation and does not relieve persons using this publication from their responsibilities under the Workplace Safety and Health Act or applicable legislation.
The appropriate regulations and statutes should always be consulted and adhered to. Atlantic Roofers Limited/North Shore Roofing Ltd. and its affiliates do not guarantee the accuracy of, nor assume liability for the information presented here.

General

Boom lifts are common on any job site that requires personnel to perform elevated work in hard to reach places. Articulated joints and extendable boom arms, allow the operator to access work areas located above obstacles or other areas that are not safe for a standard scissor lift.

Hazards Present

• Tip Over	• Dropping tools/Material	• Pedestrian Traffic
• Falls	• Power Lines	• Vehicle Traffic

Protective Mechanisms

• Manufacturer's Specifications	• Safe Work Practices/Procedures	• ERP (Emergency Response Plan)
• PPE	• Training	

Equipment / Tools Required

• Operators Certificate	• Installation Materials	• Barricades/Warning Tape
• Fall Protection PPE	• Equipment Inspection Form	

Do

- DO wear appropriate personal protective equipment (PPE)
- DO know the "Emergency Response Plan"
- DO ensure operator has been properly trained
- DO follow procedures at all times
- DO familiarize yourself with manufacturers specifications
- DO perform and record full equipment inspection before daily use

Do Not

- DO NOT use lift if not qualified
- DO NOT work without safety equipment
- DO NOT use if working platform is not working properly or if any part is damaged, work or missing
- DO NOT drive near drop-offs or holes
- DO NOT raise platform or drive on uneven or soft surfaces
- DO NOT use without guardrails, mid rails, chain, or bar in place
- DO NOT raise platform in extreme windy or gusty conditions
- DO NOT exceed rated load capacity
- DO NOT stand or sit on guardrails
- DO NOT use under the influence of alcohol or drugs
- DO NOT override safety devices
- DO NOT use ladder, scaffolding, or other devices to increase working height of platform
- DO NOT attach ropes or chains to guardrails or use as a crane

Procedure

1) **Pre-Start Checks**
   a) Perform and fill out the boom lift daily inspection record.
   b) Check for obstacles around the work platform and in the path of travel such as holes, drop offs, debris, ditches and soft fill.

Procedure **(con't)**

2) Pre-Start Checks (con't)

a) Check for overhead clearances.

b) Electrocution Hazard: The machine is not insulated. Maintain safe clearances from the electrical power lines and apparatus. You must allow for platform sway, rock or sag. The work platform does not provide protection from contact with a proximity to an electrically charged conductor

c) Make sure the batteries are fully charged (if using electric lift). Disconnect battery-charging system from external power source.

d) Check fuel and fluid levels.

e) Put on suitable fall arrest harness. Adjust harness so it fits properly and check the condition.

3) Start and Operation

a) Pull out the emergency stop button on the base control panel.

b) Select "platform" with off/platform/base select key switch.

c) Enter the basket.

d) Close entrance gate or hook entrance chain.

e) Fasten the fall arrest lanyard to the D ring provided on the platform.

f) Depress the safety switch to activate the platform controls. The safety switch will either be a foot pedal located on the platform or a red lever mounted to the "Drive/Lift" joystick.

g) Set the operation function switch to "Drive". Move the boom lift forward and then reverse. Turn the wheels left and right. Run through all the operations of the boom arms, including raise, lower, extend, retract, and basket tilt. Turn off the boom lift. Unhook your lanyard and climb out of the basket.

h) Walk in the area between the boom lift and your work area. Look for unstable soil and obstacles that need to be addressed. Inspect the work area for power lines and overhead hazards. When you are satisfied that the area is safe, drive the boom lift to the work area. Do not forget to secure your lanyard to the basket anchor point.

i) Position the boom lift as close to the work area as possible. Set the safety outriggers, if equipped. Raise the boom arm attached to the basket. Extend the second boom arm to gain additional height. Raise the articulated boom. It is important to raise the booms in this order to maintain the stability of the boom lift.

j) Adjust the height and angle of each boom arm to reach your work area. Alternate your gaze to ensure that you will not come into contact with any obstacles. Be aware of pinch points that could pin you to the top rail of the basket. When in a tight area, remember the order in which you adjusted the boom arms. This will make it easier for you to exit the work area.

k) Proceed with job using the required buttons, levers and controller located on the operator console.

l) The boom lift is equipped with a high and low range for travel. It can be used in high range in open travel ways, but should be used in low range in tight areas.

m) If painting or other potential messy work is being done while on the scissor lift, cover up the platform, handrails and controls to minimize overspray or splashing on the boom lift.

4) Shutdown Procedure

a) Lower all boom arms into their locked positions. Start with the boom closest to the base and work your way to the boom arm connected to the basket.

b) Lower the basket to an elevation that is safe for your exit.

c) Turn off the red "Emergency Stop" button located on the platform control panel.

d) Disconnect your lanyard from the platform anchor point.

e) Walk to the base of the boom lift and remove the key from the "Ignition".

Procedure **(con't)**

4) Shutdown Procedure (con't)

a) Plug-in the boom lift if it is runs on electric.

b) Check the fuel level of the boom lift if it is gas, diesel, or propane powered. If fuel, ensure the lift is filled.

c) If you are finished with the Scissor Lift, clear all tools, debris, etc., from the platform.

d) Ensure the lift is clean

**** The number one rule when operating a boom lift is safety. Improper use or failure to heed warning alarms can result in serious injury or death.**

REFERENCES:
Form F-07-1 Aerial Lift Daily Pre-use Inspection

Please contact Safety Coordinator @ 506-576-6683, if you have any questions regarding what is expected for the procedure or for clarification

The information contained in this publication is intended for general use and may not apply to every circumstance. It is not a definitive guide to government legislation and does not relieve persons using this publication from their responsibilities under the Workplace Safety and Health Act or applicable legislation.
The appropriate regulations and statutes should always be consulted and adhered to. Atlantic Roofers Limited/North Shore Roofing Ltd. and its affiliates do not guarantee the accuracy of, nor assume liability for the information presented here.

General

Forklifts are common on any job site that requires personnel to move materials around a job site and lift materials to roof or other areas. Forklift operators are to follow all applicable Vehicle and Mobile Equipment safety rules.

Hazards Present

- Tip Over
- Falls
- Vehicle Traffic
- Power Lines
- Pedestrian Traffic

Protective Mechanisms

- Manufacturer's Specifications
- PPE
- Safe Work Practices/Procedures
- Training
- ERP (Emergency Response Plan)

Equipment / Tools Required

- Operators Certificate
- Fall Protection PPE
- Installation Materials
- Equipment Inspection Form
- Barricades/Warning Tape

Do

- DO wear appropriate personal protective equipment (PPE)
- DO know the "Emergency Response Plan"
- DO ensure operator has been properly trained
- DO follow procedures at all times
- DO familiarize yourself with manufacturers specifications
- DO Know how to assess the weight of the load to be lifted
- DO perform and record full equipment inspection before daily use

Do Not

- DO NOT use lift if not qualified
- DO NOT work without safety equipment
- DO NOT use if lift is not working properly or if any part is damaged, work or missing
- DO NOT drive near drop-offs or holes
- DO NOT raise platform or drive on uneven or soft surfaces
- DO NOT use without guardrails, mid rails, chain, or bar in place
- DO NOT raise platform in extreme windy or gusty conditions
- DO NOT exceed rated load capacity
- DO NOT stand or sit on guardrails
- DO NOT use under the influence of alcohol or drugs
- DO NOT override safety devices
- DO NOT use ladder, scaffolding, or other devices to increase working height of platform
- DO NOT attach ropes or chains to guardrails or use as a crane

Procedure

1) **Pre-Start Checks**
   a) Fork lift should only be operated and maintained by a competent employee who has been instructed in the machine's operation and must be familiar with the Safety and Operating Procedures.
   b) Know the recommended load limit of the forklift and never exceed it.

Procedure **(con't)**

1) Pre-Start Checks (con't)

c) Know how to assess the weight of the load to be lifted.

d) Do a visual and operational check of the forklift at the start of the shift. Fill out and ensure inspection records are maintained.

e) Check for adequate overhead clearance before raising the load.

f) Know the blind spots of the lift with and without a load.

g) Keep pedestrians away from a forklift in operation.

h) Stop when anyone crosses the route being travelled. Lower the load to the ground, and wait until clear.

i) Wear leather gloves when moving or shifting loads or when checking skids.

j) Wear fully laced safety boots to give impact protection when moving loads or skids and to provide ankle support when mounting and dismounting lift.

k) Remain alert and prepare for the unexpected.

l) Keep hands, arms, head, feet and legs inside the confines of a moving forklift.

m) Report any collisions, damage or near-miss accidents to a supervisor immediately.

n) Do not park fork lift so as to block emergency exits or doorways.

o) Seatbelts are required to be installed and used on all powered mobile equipment fitted with rollover protection (ROPS). If forklift is not equipped with ROPS, then this does not apply.

p) *Do not operate a forklift that has a maintenance problem, or is not safe to operate.* Remove the key from the ignition switch and put an "Out of Service" tag on the forklift. Notify maintenance department

2) Loading

a) Check the rating capacity on the forklift nameplate.

b) Determine if the load weight is within the capacity of the forklift. Note that for every one inch further away from the carriage that the load is placed, there is a loss of approximately 100 pounds carrying capacity.

c) The forklift should be started with the *forks down.*

d) Lift the forks to 3 inches.

3) Lifting a Palletized Load

a) Drive to the pallet. This applies to either a pallet on a lower or upper shelf. Stop with the forks 3 inches from the load.

b) Level the mast. The mast must be at right angles to the load.

c) Raise the forks to 1 inch below the slot on the pallet.

d) Drive forward into the pallet.

e) Lift forks 4 inches.

f) Tilt back load until secured for travel. If load will obscure vision drive the lift in reverse taking care while turning as the extra swing may cause load instability.

g) Look back. Honk. Drive back so that load clears the pallets below.

h) Lower the load to 3 inches above ground. Do not drag forks on the ground.

i) Materials and equipment are to be loaded on the forklift in a manner that prevents any movement of the load that could create a hazard to workers or others.

j) All loads that could be subject to shifting during transport are to be restrained if shifting would result in the forklift becoming unstable.

4) Picking up Drums

a) Place drums securely on a pallet. If there is any possibility of shifting of the drums, have drums strapped together to minimize movement.

b) Tilt mast forward, slide fork tips along ground to position forks under object, raise forks and tilt back slightly to prevent shifting of the drums.

Procedure **(con't)**

4) Picking up Drums (con't)

c) If drums are filled with liquid, be careful to drive slowly as the fluid in the drums may cause shifting during transportation.

5) Travelling

a) Do not drive with arms, head or legs outside the confines of the forklift.

b) Always wear your seatbelt while operating a forklift.

c) Turn forklift only when the forks are lowered to a safe travelling height.

d) Ensure that the operating (road) surface is free from ice. Use tire chains if required.

e) Avoid operating forklift in high volumes of pedestrians. Wait for a quieter time to deliver to busy congested areas.

f) When operating in area of pedestrian traffic minimize risk to others by cordoning off areas with signage and/or traffic cones to prevent walk through traffic.

g) Use horn as a warning device for oncoming pedestrians.

h) Drive to point of deposit. Position the forklift in front of deposit area.

6) Unloading Pallets

a) Raise load 5-10 inches above the unloading point (space permitting).

b) Drive forward stopping 3-4 inches in front of deposit point.

c) Tilt mast forward to a right angle position so load is level.

d) Drive forward until load is aligned with corners of the stack.

e) Stop. Lower load to resting-place. Stack pallets loaded with cases, cartons straight and square. Stagger the top tier to "tie-in place".

7) Unloading Round Objects

a) Stack round objects together tight and straight.

b) Hold securely in place with wedges.

c) To nest round objects - place the bottom tier tightly together and secure with wedges. Place wedges against each roll in the bottom for a more secure stack.

d) Look behind you. Back up so that forks clear other pallets.

e) Lower forks to 3 inches from the ground.

8) Parking

a) Tilt the upright forward until the forks are level or flat on the floor.

b) Apply the parking brake and place transmission in neutral; chock the wheels if you have any doubt about the forklift moving.

9) Operations on Grades and Ramps

a) Never turn on an angled grade.

b) Keep unloaded forks facing downgrade.

c) When driving a loaded forklift up a grade, ensure that forklift is driven forwards.

d) When driving a loaded forklift down a grade, the forklift must be driven in reverse.

REFERENCES:

Form F-07-2 Forklift Daily Pre-use Inspection

Please contact Safety Coordinator @ 506-576-6683, if you have any questions regarding what is expected for the procedure or for clarification

The information contained in this publication is intended for general use and may not apply to every circumstance. It is not a definitive guide to government legislation and does not relieve persons using this publication from their responsibilities under the Workplace Safety and Health Act or applicable legislation.
The appropriate regulations and statutes should always be consulted and adhered to. Atlantic Roofers Limited/North Shore Roofing Ltd. and its affiliates do not guarantee the accuracy of, nor assume liability for the information presented here.

General

Taking heavy equipment to a service station or central location for refueling is not always practical, sometimes the fuel must be brought to the equipment. Refueling machinery and equipment can lead to an explosion if the fuel is not stored and handled properly.

Hazards Present

• Fire	• Explosion	• Spills

Protective Mechanisms

• Manufacturer's Specifications	• Safe Work Practices/Procedures	• ERP (Emergency Response Plan)
• PPE	• MSDS	• Training

Equipment / Tools Required

• Approved Container	• Gloves / Eye Protection	• Spill Kit

Do

- DO wear appropriate personal protective equipment (PPE)
- DO know the "Emergency Response Plan"
- DO store flammable liquids in approved containers
- DO turn off motor before fueling
- DO clean up spills
- DO close all containers when you are finished

Do Not

- DO NOT smoke or use open flame while fueling
- DO NOT use plastic, glass or other makeshift containers to store flammables
- DO NOT leave your vehicle's engine running when filling
- DO NOT mix even a small amount of gasoline with kerosene or diesel fuel
- DO NOT use a plastic funnel to fill a portable fuel container. The funnel will act as an insulator and promote the generation of static electrical charges

Procedure

1) **Before Refueling**
   a) Store flammable or combustible liquids in approved containers.
   b) Transport fuel to the equipment in approved containers designed for this purpose. All containers used to handle gasoline must be approved by Underwriters Laboratories (UL), Canadian Standards Association (CSA) or some other recognized testing organization.
   c) Never use plastic containers, glass bottles, or other makeshift containers to store or handle gasoline and other flammable materials.
   d) Always turn off the motor before refueling.
   e) Do not smoke or use open flames within 50 feet of areas where fuel is stored and where machines or equipment are refueled.
   f) Store a fire extinguisher, rated not less than 20 BC, within 75 feet of refueling area and know how to use it.
   g) Always clean up spills before starting the engine.
   h) Wash off gasoline from your hands or skin with soap and water.
   i) Change your clothes immediately if you get gasoline on them.

Procedure **(con't)**

2) Refueling

a) Confirm the type of fuel for the piece of equipment. (eg; gasoline or diesel).

b) Turn the motor off.

c) Determine where the fuel fill opening is located with respect to a hot engine, exhaust pipe, or other ignition source. If it is located where fuel could spill and contact the ignition source, the equipment should be allowed to cool off before refueling begins.

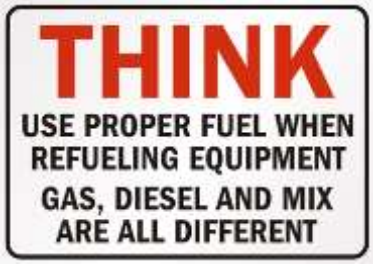

d) Ensure dispensing devices and nozzles are approved by UL, CSA or some other approved testing organization. Approved hoses and nozzles attached to fuel pumps should be equipped with bonding wires to bond the equipment to the supply vehicles when the nozzle contacts the metal fill spill spout.

e) Use a non-conductive step ladder if necessary to reach fueling area of equipment.

f) Remove fuel cap from equipment.

g) Remove cap from fuel container and insert pour spout.

h) Place fuel container spout carefully into fueling spout of equipment. Tip container carefully to empty fuel from container into equipment. Ensure that equipment is not overfilled.

i) Replace fuel cap on equipment.

j) Shut off fuel pumps and close all containers when you are finished refueling.

k) Clean up any spills before starting the engine.

Please contact Safety Coordinator @ 506-576-6683, if you have any questions regarding what is expected for the procedure or for clarification

The information contained in this publication is intended for general use and may not apply to every circumstance. It is not a definitive guide to government legislation and does not relieve persons using this publication from their responsibilities under the Workplace Safety and Health Act or applicable legislation.
The appropriate regulations and statutes should always be consulted and adhered to. Atlantic Roofers Limited/North Shore Roofing Ltd. and its affiliates do not guarantee the accuracy of, nor assume liability for the information presented here.

General

Scissor lifts are motorized vehicles and must be operated in accordance with all operating instructions provided by the manufacturer in their operating manual.

Hazards Present

• Tip Over	• Dropping tools/Material	• Pedestrian Traffic
• Falls	• Power Lines	• Vehicle Traffic

Protective Mechanisms

• Manufacturer's Specifications	• Safe Work Practices/Procedures	• ERP (Emergency Response Plan)
• PPE	• Training	

Equipment / Tools Required

• Operators Certificate	• Installation Materials	• Barricades/Warning Tape
• Fall Protection PPE	• Equipment Inspection Form	

Do

- DO wear appropriate personal protective equipment (PPE)
- DO know the "Emergency Response Plan"
- DO ensure operator has been properly trained
- DO follow procedures at all times
- DO familiarize yourself with manufacturers specifications
- DO perform and record full equipment inspection before daily use

Do Not

- DO NOT use lift if not qualified
- DO NOT work without safety equipment
- DO NOT use if working platform is not working properly or if any part is damaged, work or missing
- DO NOT drive near drop-offs or holes
- DO NOT raise platform or drive on uneven or soft surfaces
- DO NOT use without guardrails, mid rails, chain, or bar in place
- DO NOT raise platform in extreme windy or gusty conditions
- DO NOT exceed rated load capacity
- DO NOT stand or sit on guardrails
- DO NOT use under the influence of alcohol or drugs
- DO NOT override safety devices
- DO NOT use ladder, scaffolding, or other devices to increase working height of platform
- DO NOT attach ropes or chains to guardrails or use as a crane

Procedure

1) **Pre-Start Checks**
   a) Perform and fill out the boom lift daily inspection record.
   b) Check for obstacles around the work platform and in the path of travel such as holes, drop offs, debris, ditches and soft fill.

Procedure **(con't)**

1) Pre-Start Checks (con't)

c) Check for overhead clearances.

d) Electrocution Hazard: The machine is not insulated. Maintain safe clearances from the electrical power lines and apparatus. You must allow for platform sway, rock or sag. The work platform does not provide protection from contact with a proximity to an electrically charged conductor.

e) Make sure the batteries are fully charged (if using electric lift). Disconnect battery-charging system from external power source.

f) Check fuel and fluid levels.

g) Put on suitable fall arrest harness. Adjust harness so it fits properly and check the condition.

2) Start and Operation

a) Pull out the emergency stop button on the base control panel.

b) Select "platform" with off/platform/base select key switch.

c) Enter the platform.

d) Close entrance gate or hook entrance chain.

e) Fasten the fall arrest lanyard to the D ring provided on the platform.

f) Pull out the emergency stop button on the platform control panel.

g) Proceed with job using the required buttons, levers and controller located on the operator console.

h) The scissor lift is equipped with a high and low range for travel. It can be used in high range in open travel ways, but should be used in low range in tight areas.

i) If painting or other potential messy work is being done while on the scissor lift, cover up the platform, handrails and controls to minimize overspray or splashing on the scissor lift.

3) Shutdown Procedure

a) Fully lower the platform.

b) Push the emergency stop buttons.

   i) On the operator console

   ii) On the base control panel

c) Turn the base key switch to the off position.

d) If you are finished with the Scissor Lift, clear all tools, debris, etc., from the platform.

e) If electric, plug the Scissor Lift in to recharge the battery.

f) If fuel, ensure the lift is filled.

g) Ensure the lift is clean.

REFERENCES:
Form F-07-1 Aerial Lift Daily Pre-use Inspection

Please contact Safety Coordinator @ 506-576-6683, if you have any questions regarding what is expected for the procedure or for clarification

The information contained in this publication is intended for general use and may not apply to every circumstance. It is not a definitive guide to government legislation and does not relieve persons using this publication from their responsibilities under the Workplace Safety and Health Act or applicable legislation.
The appropriate regulations and statutes should always be consulted and adhered to. Atlantic Roofers Limited/North Shore Roofing Ltd. and its affiliates do not guarantee the accuracy of, nor assume liability for the information presented here.

Planned Inspection

JP # 38

General

During an inspection, activities and conditions in the workplace are carefully examined to measure compliance with company rules, policies, procedures and legislation. Situations that have the potential to cause injury or damage (sometimes called unsafe acts and conditions) are identified and corrective action is initiated.

Hazards Present

- Inhalation of Fumes
- Burns
- Slips/Trips
- Cuts/Bruises
- Falls

Protective Mechanisms

- PPE
- WHMIS Training
- Fall Protection Training

Equipment / Tools Required

- Inspection Form (paper/electronic)
- Camera
- Pen/Clipboard
- Small Flashlight
- Previous Inspection Report
- Bottled Drinking Water

Do

- DO check toxic hazards of all solvents (MSDS sheets available)
- DO use appropriate respiratory protection
- DO ensure flammable solvents are stored in special storage containers
- DO ensure manufacturers manuals are available
- DO be prepared to answer questions
- DO be polite
- DO follow all site rules and regulations

Do Not

- DO NOT place blame. The goal is to correct unsafe acts and conditions to work safe.
- DO NOT assume…..verify
- DO NOT let your temper get the best of you
- DO NOT have a confrontational attitude
- DO NOT wait for a regulatory visit before addressing non-compliance
- DO NOT manage the people, manage the problem

Procedure

1) **Before you go**
   a) Have forms and required items on hand.
   b) Bring the site contact phone number with you.
   c) Acquaint yourself with the general layout of the work area.
   d) Get and fit safety equipment that may be required.
   e) A camera is useful for later reference (small pocket camera or cell phone). Keep a written log of where and what you took a picture of.
   f) A small flashlight is useful for enclosed rooms and in between walls.
   g) A pocket tape measure can be a handy item.

2) **Upon arrival at job site**
   a) Identify the inspection team.
   b) Review reports from previous inspection.
   c) Ensure you have all the necessary equipment and PPE to do the inspection.

Procedure (con't)

3) Conducting the inspection

a) Proceed with the inspection tour.
b) During the tour, get off the "beaten path".
c) Look over, under, around, behind, inside, etc.
d) Take the time to observe the activities of all personnel.
e) Take immediate corrective action where there is imminent danger.
f) Record all unsafe acts and conditions.

4) Completion of inspection

a) Rank the unsafe acts/conditions on a "worst case first basis".
b) Identify corrective action required for each unsafe act/condition.
c) Assign a person responsible for each corrective action and a date for completion.
d) Distribute copies of the inspection report to all employees at safety meeting.
e) Maintain records for management review and considerations.

REFERENCES:
Form F-09-1 Bi-Weekly Inspection
Form S-09-1 Monthly Inspection

Please contact Safety Coordinator @ 506-576-6683, if you have any questions regarding what is expected for the procedure or for clarification

The information contained in this publication is intended for general use and may not apply to every circumstance. It is not a definitive guide to government legislation and does not relieve persons using this publication from their responsibilities under the Workplace Safety and Health Act or applicable legislation.
The appropriate regulations and statutes should always be consulted and adhered to. Atlantic Roofers Limited/North Shore Roofing Ltd. and its affiliates do not guarantee the accuracy of, nor assume liability for the information presented here.

Rescue – DBI Rollgliss Rescue Kit for Fallen Worker

JP # 39

General

Although available for use for rescue professionals, the Rollgliss rescue kit has been designed as a "peer rescue system" for use in industrial environments. It is designed to enable a rescue to be performed by a person or persona where rescue is not part of their normal job function. * The user can either be raised OR lowered to safety.

Hazards Present

- Cuts/Bruises
- Broken Bones
- Slips/Trips
- Falls

Protective Mechanisms

- PPE
- Safe Work Practices/Procedures
- Fall Protection Training

Equipment / Tools Required

- Safety Harness
- Rope Grabs
- Rollgliss Rescue Equipment
- Anchor Systems
- Safety Ropes

Do

- DO inspect equipment to ensure all parts are there and not damaged
- DO always seek medical attention as first action
- DO maintain positive communication with the person being rescued
- DO repeat rescue training frequently
- DO use a second rescue person if available

Do Not

- DO NOT leave person suspended for more than 15 minutes
- DO NOT
- DO NOT
- DO NOT
- DO NOT

Procedure

1) Anchorage

a) Identify a suitable anchorage location for the anchorage straps. This location should be rated for at least 3,300 lbs.

b) Remove the anchorage strap from the larger kit bag and position as directly above the person to be rescued as possible.

c) Secure it in place by attaching the carabiner on the descender to the strap or other suitable anchorage connector.

2) Set the Rope Distance

a) Lower the large safety hook located at the end of the rope down towards the D-ring of the person to be rescued. (May be frontal or back but back D-ring is recommended to pose the least interference)

b) If the length of the rope from the descender is insufficient to reach the rescue, more rope can be fed through the descender by slowly rotating the red handle upwards, while pulling the rope through the descender.

c) When the correct length has been attained, rotate the red handle back to its original position.

Procedure (con't)

3) Set the Pole Length and Hook

a) Once the rope length has been determined, retrieve the hook and keep it to one side.

b) Remove the adjustable pole from the bag and secure the safety rope at the base of the pole to the structure to prevent it being dropped during the rescue.

c) Extend the pole using the adjusters to a sufficient length to reach the person to be rescued.

d) Retrieve the pole and then connect the hook to the end in the open position.

4) Connection

a) While holding the rope along the length of the pole to prevent the hook from disengaging, lower the pole to the suspended worker.

b) Fit the hook into the D-ring of the safety harness. Once the D-ring is well within the hook throat, pull the pole upward to release the latch.

c) The hook should now be secured on to the person to be rescued.

d) Retrieve the pole and place it in a secure location out of the immediate work area.

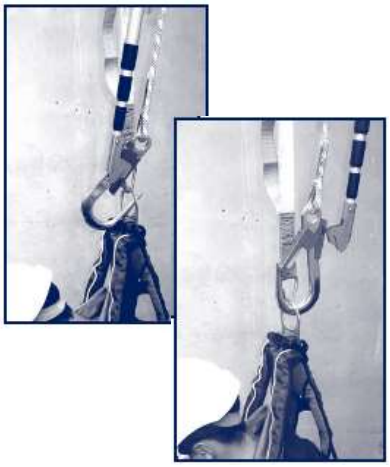

5) Remove the Slack

a) Pull the excess/loose rope back through the descender until no slack remains.

b) This part of the rope is known as the free end.

6) Install the Haul System Top

a) Remove the mini-haul system from the storage bag.

b) Retract the locking mechanism on the top ascender to enable the rope to slide through it.

c) Place the free end of the rope (haul side) within the top ascender and lock the mechanism in place.

d) The top ascender is the one with the free end of the mini haul rope.

Procedure (con't)

7) Install the Haul System Bottom

a) Retract the locking mechanism on the bottom ascender to enable the rope to slide through it.

b) Place the ascender over the tight rope (load side) between the descender and the suspended worker's D-ring and lock the mechanism in place.

c) Attach the gripping handle to the free end of the mini-haul system rope.

8) Raise the Rescuee

a) While holding the gripping handle in one hand, pull the free end of the haul system.

b) The pulleys will travel together to lift the person to be rescued in an upwards motion.

c) During this action, the person will be held up by the descender.

d) If it is necessary to repeat this step, the ascenders can be re-positioned simply by moving the top ascender up towards the descender and sliding the bottom ascender down towards the rescue.

e) This step may be required to be performed multiplt times to enable sufficient slack to be created in the rescuee's primary fall arrest device.

f) At this time, the decision on whether to raise or lower the person being rescued needs to be made.

g) There are many factors to reaching this decision such as:

   i) Obstacles below the person

   ii) Level / Nature of injury

   iii) Location of medical assistance

   iv) Time of suspension

h) In most cases, it will be easiest, quickest and safest to lower the person; however this can only be determined in the specific circumstances faced during the event.

9) Secondary System in Place

a) **If person is retained in position by a self-retracting lifeline:** the motion of raising them should unlock the device and allow them to be lowered to the ground with both the rescue device and SRL in place.

b) **If person is retained by a deployed shock absorbing lanyard:** the raising motion will allow their lanyard to be unhooked from the anchorage and to be lowered, however this will not enable a secondary device to remain in place. It is very important to ensure the person is properly retained prior to removing their lanyard.

10) Lowering the person being rescued

a) Prior to descent, the mini-haul system pulleys must be removed from the rope. Loosen the locking mechanisms of the ascenders by sliding them on the haul rope, then unlock the mechanisms and remove the ascenders from the rope.

b) Before lowering the rescue take the free end of the rescue rope and loop it through a second carabiner (not provided in kit) attached to the anchor strap. (optional)

c) The rescuer will maintain a grip on the free end during the descent and will help control the descent speed with their grip on the free end of the rescue rope.

d) With the other hand, lift the red handle on the descender to commence lowering the person to the ground.

Important: Keep fingers, hair, other rope and materials well away from the descender device during this motion to prevent entanglement.

Procedure (con't)

Note that this is a friction descent device and the rate of descent of the person is controlled by the operator within a band of adjustment. The device has a dead-man handle feature that will prevent the rescue from descending if the rescuer lets go of the handle at any time. In addition, if the rescuer opens the handle too far, the device will lock off. To unlock the device and continue descent, the rescuer must move the handle back to its original position tight against the descender.

Warning: During the descent the casualty can reach a significant speed and care needs to be taken to ensure the lowering action is gentle to avoid the possibility of any further injury.
In addition, if the person is still attached to an SRL, the device may lock off prematurely again, requiring steps 6 to 9 to be repeated, increasing the length of time the rescue remains suspended.

11) First Aid

a) The person at the bottom of the working platform should now be able to touch the rescue.
b) The second rescuer should grab the rescuee's legs in each hand and ensure they are kept in a bent position.
c) Do not bring the person's legs together – it will be very uncomfortable for them while still suspended in the harness.
d) Once the rescuee's buttocks also touch the ground, the second rescuer should move behind them and ensure they remain seated upright until medical help arrives.
e) If the rescue has been suspended for some time, this is the period they can be most severely impacted by a sudden rush of blood to the heart, causing blackout and/or death.
f) Only trained medical staff should attempt to treat the person.
g) The casualty should be kept calm and whether conscious or unconscious their neck should be supported and kept in an upright position to minimize spinal injury and ensure the airway is kept open.
h) Any open, bleeding wounds should be attended to as a matter of urgency.

12) Inspection

a) After the rescue is complete, inspect the system.
b) Check the entire rope for any cuts or knots. Inspect all metal parts for any deformations or cracks.
c) Inspect all labels to make sure they are present and legible.
d) Clean any parts that have become soiled or coated with foreign materials.
e) Carefully pack all items into their appropriate bags so everything is ready for any future rescues.

REFERENCES:
Form S-06-6 Rollgliss Rescue Kit Inspection

Please contact Safety Coordinator @ 506-576-6683, if you have any questions regarding what is expected for the procedure or for clarification

The information contained in this publication is intended for general use and may not apply to every circumstance. It is not a definitive guide to government legislation and does not relieve persons using this publication from their responsibilities under the Workplace Safety and Health Act or applicable legislation.
The appropriate regulations and statutes should always be consulted and adhered to. Atlantic Roofers Limited/North Shore Roofing Ltd. and its affiliates do not guarantee the accuracy of, nor assume liability for the information presented here.

General

Every worker must be made aware of the location of First Aid for the workplace and how to call the First Aid attendant, if one is required.

Hazards Present

• Dust Inhalation	• Asphyxiation	• Gas Inhalation

Protective Mechanisms

• PPE	• Safe Work Practices/Procedures	• Training

Equipment / Tools Required

• Respirator	• Mask	•

Do

- DO inspect your respirator for visible defects
- DO ensure you have proper fit
- DO make sure you receive the appropriate training
- DO have a medical evaluation before using a respirator
- DO dispose of disposable respirators after use

Do Not

- DO NOT use a respirator if you have a heart or lung problem (unless cleared for use by doctor)
- DO NOT share respirators
- DO NOT remove respirator in a contained environment
- DO NOT attempt to repair a punctured or deformed face piece
- DO NOT store a wet respirator in an air tight container. Always thoroughly dry first.

Procedure

1) Administering the Program

a) This code of practice sets out the requirements our company will follow for the proper selection, use and care of air-purifying respirators (APRs) as they are required for use in our workplace. Engineering Controls and proper Work Practices will remain the primary methods used to control workplace exposures. **Respirators should only be used where engineering controls and work practices are not reasonable or have failed to adequately reduce worker exposure to contaminants and as outlined in applicable occupational health and safety regulation.**

b) The program administrator will be the company safety coordinator: Tammy Firth Phone: office 506-576-6683 Cell: 506-381-3975.
The program administrator reports directly to the General Manager on matters relating to the Health & Safety program including this code. The program administrator is authorized to manage the respiratory program and ensure that employees are trained and use the air purifying respirators in a manner that protects their health & safety.

c) Employees are encouraged to bring all respirator issues to their immediate foreman and then, if necessary, to the program administrator. All employees and foremen must co-operate with the program administrator in the performance of the administrator's duties.

d) This code of practice is meant to assist the employee in choosing an air- purifying respirator that gives adequate protection to the employee from hazards associated with Roofing and affiliated processes. This program covers all aspects of our operations, which may include facility, yard, maintenance and field work

Procedure (con't)

2) Identifying the Hazards

a) Hazardous products encountered during roofing operations may include:
   i) Mineral Spirits
   ii) Fugitive emissions- working in industrial processing environments
   iii) Asbestos
   iv) Benzene solubles
   v) Biohazards- bird droppings, mould etc.
   vi) Polymeric Diphenylmethane Diisocyanate(polymeric MDI)

b) Material Safety Data Sheets for products containing hazardous ingredients that may be used in our operations provide detailed information on the hazard potential of these ingredients and must be followed in the respirator selection process.

Note: The Material Safety Data Sheets are available at your local branch office location, and/or in your project file (in field truck). If there are any Material Safety Data Sheets missing, immediately contact the program administrator.

3) Selecting the Appropriate Respirator

a) Air- purifying respirators are intended for respiratory protection against hazardous vapours, gases and/or particulate matter. These air- purifying respirators (APR) shall only be used when there is sufficient oxygen to support life. The National Institute of Occupational Safety & Health (NIOSH) approve APR's for use in workplaces.

b) For the APR to be effective, it must first be chosen correctly (specific for the task) and worn correctly. An APR user must be trained in the correct fit, choice of cartridge and limitations of their APR .Each time the APR is put on the wearer should conduct a test of the effectiveness of the seal of the mask to their face. This is done by performing a negative or positive test as is described in Section 4.

4) Respirator Facial Fit

a) Conduct a negative and positive pressure test.

b) **Negative Pressure Test:** Place the palm of your hand over the in-let openings in the cartridge, inhale and hold your breath for 5 seconds. If the face piece collapses slightly under slight negative pressure and no air leaks occur you have obtained a proper seal.

c) **Positive Pressure Test:** To conduct a positive pressure test, cover the exhalation valve guard using the palm of your hand and exhale. If the face piece expands slightly and no leaks occur, you have obtained a proper seal.

5) Training

a) All employees who wear APR's shall be trained in the following:
   i. Airborne contaminants in the workplace
   ii. Symptoms and toxic effects of overexposure to contaminants
   iii. Putting on and checking you're a
   iv. Maintenance, cleaning, sanitizing and storage of your APR
   v. What to do in case of emergency
   vi. Provincial legislation on respiratory protection

Procedure (con't)

6) Respirator Use

a) Face piece- inspect the face piece to make sure that the sealing flange is not distorted or damaged. Inspect all components, including the inhalation and exhalation valves to ensure they appear to be in god working order.

b) Filters- Correctly choose the filters, ensure that they are attached to the face piece with a proper seal.

c) Headband- ensure that the headband is installed correctly, and adjusted to fit the wearer correctly.

d) Grasp the respirator with one hand, the headband with the other. Place the face piece over the face with the narrow portion over the bridge of the nose. Then pull the headband over the head with one part of the cradle resting on the top the other resting behind the head. Hook the bottom headband by hooking the clips to one another. Adjust the fit as required by tightening or loosening, and then conduct a negative and positive pressure test.

e) If you become dizzy, have difficulty breathing, smell, taste, or sense any irritation from the contaminants, or if the respirator has become damaged **LEAVE THE AREA IMMEDIATELY!**

7) Cleaning, Maintenance & Storage

a) Remove filter cartridges

b) Inspect and remove headband

c) Remove breathing valves and inspect for damage

d) Clean face piece and valves with soap and water

e) Replace parts and store so they are protected against damage, contamination, dust, sunlight, extreme temperatures, excessive moisture and damaging chemicals.

8) Health Surveillance of Respirator Wearers

a) Some respirators increase breathing resistance. A few employees may have difficulty wearing a respirator because of a medical condition or fitness level. In such cases, the employer must ensure that employees who are affected obtain clearance from a physician before wearing a respirator. The health of employees who wear respirators should be reviewed regularly.

9) Evaluating the Program

a) At least once a year the program administrator will review the air purifying respirator program. The program administrator will consult with respirator users during the review. The review will include the following:

i. Effectiveness and appropriateness of the respirators being used
ii. Fit testing
iii. Respirator wearer training
iv. Respirator use, maintenance ,cleaning, and storage
v. Health surveillance of respirator users
vi. User suggestions for program improvements
vii. Possible workplace improvements to minimize APR use
viii. New products and technology available on the market

Procedure (con't)

10) Records

a) Records will be kept for all employees who wear respirators. Records should include information such as:
   i) The contaminants to which the employee is exposed
   ii) Type of respirator(s) used by employee
   iii) Fit testing records
   iv) Training
   v) Medical clearance information

Yves Bradet, General Manager
Atlantic Roofers Limited

Jan 14/19
Date

Terry Casey, General Manager
North Shore Roofing Ltd.

Jan 14/19
Date

Please contact Safety Coordinator @ 506-576-6683, if you have any questions regarding what is expected for the procedure or for clarification

The information contained in this publication is intended for general use and may not apply to every circumstance. It is not a definitive guide to government legislation and does not relieve persons using this publication from their responsibilities under the Workplace Safety and Health Act or applicable legislation.
The appropriate regulations and statutes should always be consulted and adhered to. Atlantic Roofers Limited/North Shore Roofing Ltd. and its affiliates do not guarantee the accuracy of, nor assume liability for the information presented here.

General

Protecting employees and general public from injuries and dangers associated with the use of cutting openings in a roof.

Hazards Present

• Inhalation of Harmful Substances	• Fall from Height	• Cuts/Bruises
• Slips/Trips	• Strains/Sprains	• Fire/Explosion

Protective Mechanisms

• Fall Protection	• Manufacturers Recommendations	• Proper Clothing
• PPE	• Fire Extinguisher	• Training

Equipment / Tools Required

• Reciprocating Saw	• Barricades/Caution Tape	• Warning Signs
• Ladder/Hoist	• Drill with Metal Bit	• Fire Extinguisher

Do ✓

- DO wear long sleeve shirts, buttoned at cuffs, glasses, goggles or face shield, hard hat, properly fitted pants without cuffs. Tie long hair back.
- DO Inspect the tool or equipment before use
- DO keep the work area clean. Remove obstacles that could cause personal injury to the operator or others.
- DO read and understanding the operation manual before operating any roof cutting tools or equipment
- DO inspect the machine before use.
- DO properly guard and/or cover any roof openings. Use proper signs and warnings.
- DO shut off tool/equipment when it is not in use and/or not attended
- DO Ensure to review entire procedure before cutting

Do Not ✗

- DO NOT operate the tools without proper guards in place.
- DO NOT allow smoking anywhere around the machine.
- DO NOT use tools or equipment if damaged. Remove from service and have repaired by qualified person.
- DO NOT cut towards people, buildings, vehicles or other objects that could be damaged by flying debris.
- DO NOT stand on piece of decking to be cut

Procedure

1) Before you operate the reciprocating saw

- **a.** Make sure you understand the manufacturer's operation manual
- **b.** Secure ground area under work areas and hoisting area
- **c.** Rope off or post signs that work is being performed overhead. Also, barricade the area below the opening on the inside of the building
- **d.** Keep the work area clean. Remove obstacles that could cause personal injury to the operator or others.
- **e.** Wear the proper clothing such as, long sleeve shirts, buttoned at cuffs, glasses, goggles, or face shield, hard hat, properly fitted pants without cuffs. Tie long hair back

2) Conduct a pre-starting inspection of tools/equipment and work area

- **a.** Check the tools/equipment for damages
- **b.** Inspect under roof deck for hazards such as electrical wire, sprinkler system pipes, flammables, traffic routes, etc.
- **c.** Make sure the structural integrity of the deck is not compromised from cutting the opening. Verify with general contractor/building owner.

Procedure **(con't)**

1) Cut Opening in Deck/Membrane/Insulation

a) Using a reciprocating saw, make sure the proper blade is used for the material being cut. (ie; metal blade for metal deck).

b) Make sure that electrical cords do not fray on sharp edges.

c) Make a pilot hole to make it easier to start with the saw. Use the drill with an appropriate bit for the material being drilled through. Plunge cutting is dangerous and is not a preferred method of starting a cut.

d) Be sure you do not stand on the piece being cut.

e) Cut the opening as per plan size.

2) Secure New Opening

a) Immediately cover and barricade the new opening as per job procedure Roof – Hole & Skylight Protection.

3) Lower Debris to Ground

a) Use the dump chute to lower pieces to ground level or if too large, use hoist.

b) Make sure hoisting area is safe and cordoned off.

Please contact Safety Coordinator @ 506-576-6683, if you have any questions regarding what is expected for the procedure or for clarification

The information contained in this publication is intended for general use and may not apply to every circumstance. It is not a definitive guide to government legislation and does not relieve persons using this publication from their responsibilities under the Workplace Safety and Health Act or applicable legislation.
The appropriate regulations and statutes should always be consulted and adhered to. Atlantic Roofers Limited/North Shore Roofing Ltd. and its affiliates do not guarantee the accuracy of, nor assume liability for the information presented here.

General

Protecting employees and general public from injuries and dangers associated with installing fiberboard on a roof.

Hazards Present

• Slips/Trips	• Fall from Height	• Cuts/Bruises

Protective Mechanisms

• Fall Protection • PPE	• Manufacturers Recommendations • Training	• Safe Work Practices/Procedures

Equipment / Tools Required

• Drill	• Washers & Screws	• Insulation/Utility Knife

Do

- DO wear long sleeve shirts, buttoned at cuffs, glasses, goggles or face shield, hard hat, properly fitted pants without cuffs. Tie long hair back.
- DO keep the work area clean. Remove obstacles that could cause personal injury to the operator or others.
- DO properly guard and/or cover any roof openings. Use proper signs and warnings.
- DO be very cautions on windy days. Ensure to keep material weighted down at all times.

Do Not

- DO NOT expose to open flame or excessive heat

Procedure

1) Preparing to Install

a) Secure ground area under work areas and hoisting area.

b) Rope off or post signs that work is being performed overhead.

c) Keep the work area clean. Remove obstacles that could cause personal injury to the operator or others.

d) Wear the proper clothing such as, long sleeve shirts, buttoned at cuffs, safety glasses, hard hat, properly fitted pants without cuffs. Tie long hair back.

2) Conduct a pre-starting inspection of tools/equipment and work area

a) Check the tools/equipment for damages and electrical cords for defects.

b) Inspect roof deck for hazards. Ensure a Roof Loading assessment Form “P-02-1”.

3) Raise fiberboard to Roof Area

a) Use appropriate “Hoisting Job Procedures”.

b) Place sheets in a safe area ensuring they are secured so they don’t blow away in a strong wind gust.

4) Installing

a) Ensure appropriate Fall Protection Plan is in place (Form F-02-2) and all appropriate PPE is inspected and in use as required for plan.

b) Place sheets in place on roof keeping a firm grip while handling.

Procedure **(con't)**

4) Installing (con't)

c) Always carry sheets upwind on roof edge

d) When placing fiberboard on deck, use proper body mechanics to prevent injury.

e) In windy conditions, closely manage the sheets being laid out ahead of the fastening process. Don't lay too many sheets out ahead.

f) Cut sheets to size using insulation or utility knife. Make sure work gloves are worn to protect hands from cuts.

g) Verify with shop drawing on screw pattern. Position washers and screws and fasten using a screw gun. Use proper body mechanics to avoid back injuries.

h) Use screw gun to fasten. Ensure tool has been inspected prior to use, check electrical cords for defects.

i) Use only GFCI (ground fault circuit interrupters) cords or cordless screw guns in wet conditions.

j) Use a long screw gun whenever possible to eliminate/reduce amount of kneeling and bending.

k) Mop with hot tar. (use appropriate job procedures for kettle use and mopping tar)

l) When mopping hot tar, make sure PPE is worn to prevent burns. In addition, pant legs should be worn outside of and covering the top of boot to prevent tar from splashing into boot.

5) End of day

a) Clean up all cut pieces and lower to ground using hoist or dump chute (see appropriate job procedure) for proper disposal.

b) Clean up all loose screws and washers.

c) Make sure any sheets that have not been installed yet are securely fastened so as not to blow away.

d) Pick up all tools and extension cords to be lowered to ground and stored for future use.

e) Make sure that any equipment/tools needing repairs are tagged and given to supervisor.

Please contact Safety Coordinator @ 506-576-6683, if you have any questions regarding what is expected for the procedure or for clarification

The information contained in this publication is intended for general use and may not apply to every circumstance. It is not a definitive guide to government legislation and does not relieve persons using this publication from their responsibilities under the Workplace Safety and Health Act or applicable legislation.
The appropriate regulations and statutes should always be consulted and adhered to. Atlantic Roofers Limited/North Shore Roofing Ltd. and its affiliates do not guarantee the accuracy of, nor assume liability for the information presented here.

General

Protecting employees and general public from injuries and dangers associated with installing insulation & ballast.

Hazards Present

• Slips/Trips	• Fall from Height	• Cuts/Bruises

Protective Mechanisms

• Fall Protection • PPE	• Manufacturers Recommendations • Training	• Safe Work Practices/Procedures

Equipment / Tools Required

• Saw • Wheelbarrow	• Brooms / Shovels / Rakes • Gravel Bucket	• Insulation/Utility Knife • Motorized Gravel Spreader

Do

- DO wear long sleeve shirts, buttoned at cuffs, glasses, goggles or face shield, hard hat, properly fitted pants without cuffs. Tie long hair back.
- DO keep the work area clean. Remove obstacles that could cause personal injury to the operator or others.
- DO ensure a Roof Loading Assessment is done.
- DO properly guard and/or cover any roof openings. Use proper signs and warnings.
- DO ensure all appropriate PPE is used

Do Not

- DO NOT expose to open flame or excessive heat
- DO NOT overload roof deck

Procedure

1) Preparing to Install

a) Secure ground area under work areas and hoisting area.
b) Rope off or post signs that work is being performed overhead.
c) Keep the work area clean. Remove obstacles that could cause personal injury to the operator or others.
d) Wear the proper clothing such as, long sleeve shirts, buttoned at cuffs, safety glasses, hard hat, properly fitted pants without cuffs. Tie long hair back.

2) Conduct a pre-starting inspection of tools/equipment and work area

a) Check the tools/equipment for damages and electrical cords for defects.
b) Inspect roof deck for hazards. Ensure a Roof Loading assessment Form “P-02-1” is done.
c) Fill out appropriate daily pre-use inspection forms as required for equipment being used.

3) Raise materials to Roof Area

a) Using a crane or hoist, bring materials to roof area. Refer to “Hoisting Job Procedures”.
b) Place sheets in a safe area ensuring they are secured so they don’t blow away in a strong wind gust.
c) Do not overload deck. Refer to Form P-02-1, “Roof Loading Assessment.”

Procedure **(con't)**

4) Installing

a) Ensure appropriate Fall Protection Plan is in place (Form F-02-2) and all appropriate PPE is inspected and in use as required for plan.

b) Place sheets in place on roof keeping a firm grip while handling

c) Always carry sheets upwind on roof edge

d) When placing fiberboard on deck, use proper body mechanics to prevent injury.

e) In windy conditions, closely manage the sheets being laid out ahead of the ballast process. Don't lay too many sheets out ahead.

f) Cut sheets to size using insulation or utility knife. Make sure work gloves are worn to protect hands from cuts.

g) Lay out scrim sheet and cut to size. Use proper body mechanics to avoid back injuries.

h) Using crane or hoist and gravel bucket, hoist gravel to the roof. (Refer to appropriate job procedures for gravel bucket and hoisting/rigging).

i) Using gravel bucket, motorized gravel spreader, shovels, rakes, and brooms spread gravel ensuring even distribution as per job specifications.

5) End of day

a) Clean up all cut pieces and lower to ground using hoist or dump chute (see appropriate job procedure) for proper disposal.

b) Clean up all loose items and materials.

c) Make sure any materials that have not been installed yet are securely fastened so as not to blow away.

d) Pick up all tools and extension cords to be lowered to ground and stored for future use.

e) Make sure that any equipment/tools needing repairs are tagged and given to supervisor.

Please contact Safety Coordinator @ 506-576-6683, if you have any questions regarding what is expected for the procedure or for clarification

The information contained in this publication is intended for general use and may not apply to every circumstance. It is not a definitive guide to government legislation and does not relieve persons using this publication from their responsibilities under the Workplace Safety and Health Act or applicable legislation.
The appropriate regulations and statutes should always be consulted and adhered to. Atlantic Roofers Limited/North Shore Roofing Ltd. and its affiliates do not guarantee the accuracy of, nor assume liability for the information presented here.

General

Protecting employees and general public from injuries and dangers associated with mopping tar.

Hazards Present

• Slips/Trips	• Fall from Height	• Cuts/Bruises
• Burns	• Tar Spills	• Fumes

Protective Mechanisms

• ERP (Emergency Response Plan)	• Manufacturers Recommendations	• Safe Work Practices/Procedures
• PPE	• Training	

Equipment / Tools Required

• Mop Bucket	• Mop	• Hot Lugger

Do

- DO wear long sleeve shirts, buttoned at cuffs, glasses, goggles or face shield, hard hat, properly fitted pants without cuffs. Tie long hair back.
- DO keep the work area clean. Remove obstacles that could cause personal injury to the operator or others.
- DO ensure a Roof Loading Assessment is done.
- DO properly guard and/or cover any roof openings. Use proper signs and warnings.
- DO ensure all appropriate PPE is used
- DO wear burn proof gloves

Do Not

- DO NOT drag or "ride" the mop cart over objects
- DO NOT overload roof deck
- DO NOT overfill the mop cart
- DO NOT mop hot asphalt near where others are working. Clear the area.
- DO NOT leave tools or materials unsecured on roof at end of day

Procedure

1) **Preparation**
   a) Secure ground area under work areas and kettle area.
   b) Rope off or post signs that work is being performed overhead.
   c) Keep the work area clean. Remove obstacles that could cause personal injury.
   d) Wear the proper clothing such as, long sleeve shirts, buttoned at cuffs, safety glasses, hard hat, properly fitted pants without cuffs. Tie long hair back.

2) **Conduct a pre-starting inspection of tools/equipment and work area**
   a) Check the tools/equipment for damages or defects.
   b) Inspect roof deck for hazards. Ensure a Roof Loading assessment Form "P-02-1" is done.
   c) Fill out appropriate daily pre-use inspection forms as required for equipment being used.

3) **Raise materials to Roof Area**
   a) Refer to job procedures for Kettle use and setting up the supply line and transfer of hot stuff.

Procedure **(con't)**

3) Raise materials to Roof Area (con't)

b) Once the hot asphalt gets to the roof, transfer it from the hot lugger to the mop cart.

c) Only fill mop cart to 75% capacity to prevent spills while transporting to work area.

d) Make sure you wear burn proof gloves and pant legs should be down over boots to prevent splashing on legs.

4) Move mop cart to work area

a) Haul mop cart to the area where you are working.

b) Ensure a clear pathway. Move objects and people as necessary.

c) Whenever moving hot asphalt, yell "HOT" to alert everyone around to be on guard.

d) Never drag or "ride" the mop cart over objects on the deck.

5) Use mop to spread hot asphalt

a) Ensure all openings are sealed or covered before beginning to mop to prevent dripping hot asphalt below.

b) To mop, step to one side of the mop to allow hot asphalt to be dispensed.

c) Walk forward pulling the mop behind you.

d) Other workers should be clear of the mopping area and should not be kneeling or working close enough to be splashed.

6) End of day / clean up

a) Clean up all tools/equipment and lower to ground using hoist or dump chute (see appropriate job procedure) for proper disposal.

b) Clean up all loose items and materials.

c) Make sure any materials that have not been installed yet are securely fastened so as not to blow away.

d) Pick up all tools and extension cords to be lowered to ground and stored for future use.

e) Make sure that any equipment/tools needing repairs are tagged and given to supervisor.

Please contact Safety Coordinator @ 506-576-6683, if you have any questions regarding what is expected for the procedure or for clarification

The information contained in this publication is intended for general use and may not apply to every circumstance. It is not a definitive guide to government legislation and does not relieve persons using this publication from their responsibilities under the Workplace Safety and Health Act or applicable legislation.
The appropriate regulations and statutes should always be consulted and adhered to. Atlantic Roofers Limited/North Shore Roofing Ltd. and its affiliates do not guarantee the accuracy of, nor assume liability for the information presented here.

General

Protecting employees and general public from injuries and dangers associated with roof removal and disposal.

Hazards Present

• Slips/Trips • Property Damage	• Fall from Height	• Cuts/Bruises

Protective Mechanisms

• ERP (Emergency Response Plan) • PPE	• Manufacturers Recommendations • Training	• Safe Work Practices/Procedures

Equipment / Tools Required

• Dump Chute	• Wheel barrow	• Job Specific

Do ✓

- DO wear long sleeve shirts, buttoned at cuffs, glasses, goggles or face shield, hard hat, properly fitted pants without cuffs. Tie long hair back.
- DO keep the work area clean. Remove obstacles that could cause personal injury to the operator or others.
- DO ensure a Roof Loading Assessment is done.
- DO properly guard and/or cover any roof openings. Use proper signs and warnings.
- DO ensure all appropriate PPE is used

Do Not ✗

- DO NOT overload roof deck

Procedure

1) Preparation

a) Secure ground area under work areas.

b) Rope off or post signs that work is being performed overhead.

c) Keep the work area clean. Remove obstacles that could cause personal injury.

d) Wear the proper clothing such as, long sleeve shirts, buttoned at cuffs, safety glasses, hard hat, properly fitted pants without cuffs. Tie long hair back.

2) Conduct a pre-starting inspection of tools/equipment and work area

a) Check the tools/equipment for damages or defects.

b) Inspect roof deck for hazards. Ensure a Roof Loading assessment Form “P-02-1” is done.

c) Prepare a Fall Protection Plan (Form F-02-2).

d) Fill out appropriate daily pre-use inspection forms as required for equipment being used.

e) Review selection of an approved, suitable dump site.

f) Review site hazard assessment with all employees.

3) Set-up of area

a) Notify any building occupants of the tear off process and how it will affect them.

b) Block off all walkways and doorways that may provide access to the work area.

c) No one is to work directly under the dump chute. Make sure it is barricaded with pylons or caution tape.

Procedure **(con't)**

3) Set-up of area (con't)

d) Set up dump chute and/or hoist using appropriate job procedures.

4) Raise equipment to roof

a) Using a crane or hoist, bring materials and equipment to roof area. Refer to "Hoisting Job Procedures".

5) Removal of existing roof system

a) Using site specific equipment, remove only as much roofing in one day as can be safely replaced and recovered.

b) Use proper body mechanisms when bending / lifting to prevent injuries.

c) After removing a portion, place in wheel barrow and bring to dump chute. Load pieces into chute by hand to avoid jams. (Refer to "Dump Chute" job procedures)

6) End of day / clean up

a) Clean up all tools/equipment and lower to ground using hoist or dump chute (see appropriate job procedure) for proper disposal.

b) Clean up all loose items, materials and debris.

c) Make sure any materials that have not been installed yet are securely fastened so as not to blow away.

d) Pick up all tools and extension cords to be lowered to ground and stored for future use.

e) Make sure that any equipment/tools needing repairs are tagged and given to supervisor

Please contact Safety Coordinator @ 506-576-6683, if you have any questions regarding what is expected for the procedure or for clarification

The information contained in this publication is intended for general use and may not apply to every circumstance. It is not a definitive guide to government legislation and does not relieve persons using this publication from their responsibilities under the Workplace Safety and Health Act or applicable legislation.
The appropriate regulations and statutes should always be consulted and adhered to. Atlantic Roofers Limited/North Shore Roofing Ltd. and its affiliates do not guarantee the accuracy of, nor assume liability for the information presented here.

General

Protecting employees and general public from injuries and dangers associated with installing roofing membrane. The use of the peel & stick to protect roof area while torching near flammable substrates (insulation, wood decks, etc.)

Hazards Present

• Slips/Trips	• Fall from Height	• Cuts/Bruises

Protective Mechanisms

• Fall Protection	• Manufacturers Recommendations	• Safe Work Practices/Procedures
• PPE	• Training	• WHMIS

Equipment / Tools Required

• MSDS	• Brushes/Rollers/Paint Tray	• Insulation/Utility Knife
•	•	•

Do

- DO wear long sleeve shirts, buttoned at cuffs, glasses, goggles or face shield, hard hat, properly fitted pants without cuffs. Tie long hair back.
- DO keep the work area clean. Remove obstacles that could cause personal injury to the operator or others.
- DO ensure a Roof Loading Assessment is done.
- Do have MSDS sheets available for product.
- DO properly guard and/or cover any roof openings. Use proper signs and warnings.
- DO ensure all appropriate PPE is used
- Do ensure that membrane is installed prior to torching to help prevent fires from occurring on the roof

Do Not

- DO NOT expose primer to open flame, sources of ignition or excessive heat
- DO NOT overload roof deck
- DO NOT store primer in a space without ventilation
- DO NOT store primer near heat, dampness, oxidizing agents or direct sunlight
- DO NOT accelerate primer drying time by heating with a torch

Procedure

1) **Preparing to Install**
   a) Secure ground area under work areas and hoisting area.
   b) Rope off or post signs that work is being performed overhead.
   c) Keep the work area clean. Remove obstacles that could cause personal injury to the operator or others.
   d) Wear the proper clothing such as, long sleeve shirts, buttoned at cuffs, safety glasses, hard hat, properly fitted pants without cuffs. Tie long hair back.

2) **Conduct a pre-starting inspection of tools/equipment and work area**
   a) Check the tools/equipment for damages and electrical cords for defects.
   b) Inspect roof deck for hazards. Ensure a Roof Loading assessment Form “P-02-1” is done.
   c) Fill out appropriate daily pre-use inspection forms as required for equipment being used.

Procedure **(con't)**

3) Raise Materials to Roof Area

a) Using a crane or hoist, bring materials to roof area. Refer to "Hoisting Job Procedures".
b) Place sheets in a safe area ensuring they are secured so they don't blow away in a strong wind gust.
c) DO NOT overload the roof deck. Refer to Form P-02-1, "Roof Loading Assessment".

4) Apply Primer

a) Always refer to particular product manufacturer's instructions for specific and detailed instructions for the product being used.
b) Using a paint tray, brushes or paint rollers, apply product to required area.
c) Prime only a large enough area that is manageable to work with.
d) Most primers will need to be thoroughly dry before applying waterproofing membrane. (Check manufacturer's instructions).
e) Do not accelerate drying by heating with a torch.
f) Store primer in a well-ventilated area.
g) Make sure the container is firmly closed when not in use.
h) Tools can be cleaned with petroleum solvents such as mineral spirits, varsol, xylene, etc.

5) Install the Membrane

a) Roll out approximately 3 m (10 ft) of membrane and peel back the first 1 m (3 ft) of film.
b) Adhere the exposed part to the substrate (previously primed) and unroll the remaining membrane as far as possible.
c) Once the membrane is in place, peel off the film diagonally while holding the membrane tight.
d) Make sure appropriate overlap is considered as per manufacturer's instructions.
e) Continue in this manner until area is covered.

6) Clean up

a) Pick up and dispose of any cut pieces and debris in the appropriate manner.

Please contact Safety Coordinator @ 506-576-6683, if you have any questions regarding what is expected for the procedure or for clarification

The information contained in this publication is intended for general use and may not apply to every circumstance. It is not a definitive guide to government legislation and does not relieve persons using this publication from their responsibilities under the Workplace Safety and Health Act or applicable legislation.
The appropriate regulations and statutes should always be consulted and adhered to. Atlantic Roofers Limited/North Shore Roofing Ltd. and its affiliates do not guarantee the accuracy of, nor assume liability for the information presented here.

General

Fatal falls and serious injuries may result from inadequate guarding around skylights and roof and floor openings.

Hazards Present

• Slips/Trips	• Fall from Height	• Cuts/Bruises

Protective Mechanisms

• Fall Protection	• Manufacturers Recommendations	• Safe Work Practices/Procedures
• PPE	• Training	

Equipment / Tools Required

• Hand/Power tools	• 2 x 4 wood / Plywood	• Fasteners / Screws
• Blaze Orange Spray Paint	• Ladder / Hoist	• Barricades / Caution Tape

Do

- DO keep the work area clean. Remove obstacles that could cause personal injury to work area including underneath the roof opening.
- DO ensure a Roof Loading Assessment is done.
- DO ensure all appropriate PPE is used
- DO ensure hole cover cannot be easily removed

Do Not

- DO NOT leave the work area before covering a hole you created or uncovered
- DO NOT store materials over hole cover
- DO NOT sit on, lean against or step on a skylight or hole cover
- DO NOT overload roof deck

Procedure

1) Conduct a pre-starting inspection of tools/equipment and work area

a) Check the tools/equipment for damages and electrical cords for defects.
b) Inspect roof deck for hazards. Ensure a Roof Loading assessment Form "P-02-2" is done.
c) Ensure a Fall Protection Plan has been done and is reviewed by all employees (Form "P-02-3)
d) Fill out appropriate daily pre-use inspection forms as required for equipment being used.
e) Inspect all fall protection equipment before use.
f) Secure ground area under work areas and hoisting area.
g) Rope off or post signs that work is being performed overhead.

2) Raise materials to Roof Area

a) Using a crane or hoist, bring materials to roof area. Refer to "Hoisting Job Procedures" (JP 23 to JP 25).
b) Place sheets in a safe area ensuring they are secured so they don't blow away in a strong wind gust.
c) Do not overload deck. Refer to Form P-02-2, "Roof Loading Assessment."

3) Create cover for holes/skylights

a) Use suitable materials such as 2 x 4 or plywood with enough strength that it won't break if loads are imposed on it.
b) Use hand and/or power tools to fabricate a cover for any roof openings.

Procedure **(con't)**

3) Create cover for holes/skylights (con't)

c) Use proper type tools for the specific job being done.

d) Use of improper tools can result in personal injury or damage to materials or property.

4) Fasten cover to deck

c) Place the cover over the hole and secure the cover to the deck using appropriate type screws for the deck type.

d) Cover must be fastened in such a way so that it cannot be easily removed, to prevent displacement by wind, equipment, or employees. This will prevent accidental removal and prevent a possible injury resulting from a fall.

5) Mark cover

c) Use a can of bright coloured spray paint and mark the word "HOLE" on the cover in large letters.

d) Do not use the hole cover as an area to store materials. This will put undue stress on the cover and would potentially cover the Blaze Orange label.

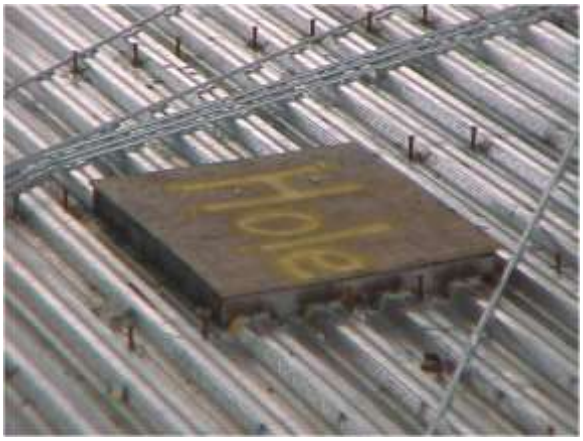

Please contact Safety Coordinator @ 506-576-6683, if you have any questions regarding what is expected for the procedure or for clarification

The information contained in this publication is intended for general use and may not apply to every circumstance. It is not a definitive guide to government legislation and does not relieve persons using this publication from their responsibilities under the Workplace Safety and Health Act or applicable legislation.
The appropriate regulations and statutes should always be consulted and adhered to. Atlantic Roofers Limited/North Shore Roofing Ltd. and its affiliates do not guarantee the accuracy of, nor assume liability for the information presented here.

General

**** Note: Hot Work Permit Required and Fire Watch Book Must be Completed ****

Protecting employees and general public from injuries and dangers associated with working with torches.

Hazards Present

• Burns • Property Damage	• Fire	• Freeze Burns from Propane

Protective Mechanisms

• Fall Protection • PPE	• Manufacturers Recommendations • Training	• Safe Work Practices/Procedures • Fire Extinguisher

Equipment / Tools Required

• Torch • Metal Striker	• Hoses • Propane Tank/Vertical Cart Stand	• Fire Extinguisher • Hot Work Permit

Do ✓

- DO inspect torches and other equipment before use
- DO ensure other workers stay at least 2 or 3 meters away from the flame
- DO ensure all appropriate PPE is used

Do Not ✗

- DO NOT use leaking propane equipment
- DO NOT torch directly at flashings, corners, voids in the roof deck, wood or insulation
- DO NOT torch near gas and electrical lines

Procedure

1) **Conduct a pre-starting inspection of tools/equipment and work area**
   a) Make sure work area is free of debris, clutter and there are no flammables present.
   b) Ensure there is a fully charged fire extinguisher readily available.
   c) Inspect propane tanks and all components of your torch system for any signs of wear or damage.
   d) If damage is noticed or suspected, prevent item from further use and notify the immediate supervisor.
   e) Make sure you have the right type of propane tank for the torch in use (either liquid or vapor).
   f) Make sure there is one (1) fire extinguisher available nearby for each torch being used.

2) **Place propane tank in a secure upright position**
   a) Store propane bottles clear of open flame – at least 6 meters (20 feet) from torch – and secure in an upright position. Make sure hose length is adequate for this distance.

3) **Connect the torch hose to the propane tank**
   a) Make sure that the regulator on the torch is fully closed.
   b) Use an appropriate wrench to securely tighten the fittings; pliers or vice grips should not be used as they can slip and damage the brass fittings on your torch system making future installation or removal difficult.

4) **Open the valve on the propane tank**
   a) Do not regulate the flow of propane from the valve on the tank; this valve must be fully opened.
   b) Once the tank valve is opened and the lines are charged with propane, the entire system should be inspected for leaks.
   c) If a leak is noticed, close the valve on the propane tank; either repair or replace the leaking component.

Procedure **(con't)**

5) Ignite the propane torch

a) Make sure that the torch is aimed in a safe direction.
b) Have a striker on hand.
c) Slowly open the regulator on the torch.
d) As soon as propane starts to flow from the torch, ignite it with a striker (do not use matches or a lighter).
e) Use the regulator to adjust the flame to the desired intensity.
f) Should striker fail to light the torch on the first attempt, close the valve and wait for escaped gas to dissipate before attempting to relight the torch.

6) Extinguish torch after use

a) Do not leave a lit torch unattended.
b) Make sure torch stands are used when torch is not in use.
c) A torch that will be temporarily out of use can be extinguished by closing the regulator on the torch.
d) A torch that will be out of use for longer periods of time should be extinguished by closing the valve on the propane tank; this will use up any propane that is left in the torch hose.
e) A torch that will no longer be used should be disconnected from the propane tank; the hose should be coiled up and returned to its proper storage location to reduce trip hazards.

7) Conduct a fire watch

a) Fire watch must be present and remain on site a minimum of two (2) hours upon completion of hot work.
b) Fire watch person must be trained to watch for hot spots and periodically check heat sensors.
c) Fire watch results must be recorded in "Fire Watch Record Book".

8) Conduct a post operation inspection

a) Inspect all components of the torch system after use.
b) If there is any suspected damage, the item should be repaired or replaced; notify the immediate supervisor.
c) Maintain good housekeeping and clean up your work area.

Please contact Safety Coordinator @ 506-576-6683, if you have any questions regarding what is expected for the procedure or for clarification

The information contained in this publication is intended for general use and may not apply to every circumstance. It is not a definitive guide to government legislation and does not relieve persons using this publication from their responsibilities under the Workplace Safety and Health Act or applicable legislation.
The appropriate regulations and statutes should always be consulted and adhered to. Atlantic Roofers Limited/North Shore Roofing Ltd. and its affiliates do not guarantee the accuracy of, nor assume liability for the information presented here.

Roofing Kettle – Set-up Tar Supply Line

JP # 49

General

Roofing kettles are designed and manufactured for heating of roofing asphalt and coal tar pitch of the types and grades which can be melted by directly applied heat. The tar supply line transfers the hot tar through a pipe to the roof level. Misuse of this equipment could result in damage or injury.

Hazards Present

- Burns
- Fires
- Tar Spills

Protective Mechanisms

- Manufacturers Recommendations
- Burn proof gloves
- ERP (Emergency Response Plan)
- Face Shield
- Protective Clothing
- Safe Work Practices/Procedures
- Training

Do

- DO make sure area on ground is free of debris, clutter and flammables
- DO use appropriate PPE including fall protection for workers on the roof
- DO keep fingers clear of end when inserting pipe into hole
- DO inspect all equipment prior to use. Record on daily Inspection Form.
- DO maintain communication with person on the ground
- DO have a fully charged dry chemical fire extinguisher available at the kettle
- DO check the pump packing and frequently (when hot) tighten if there is any excessive leakage. Do not over tighten
- DO Ensure to wear appropriate gloves when handling pipe

Do Not

- DO NOT over exert yourself when tightening pipe. Use proper body mechanics
- DO NOT attempt to move tar kettle once fired
- DO NOT panic if a fire occurs. Close kettle lids and turn off burners
- DO NOT leave kettle unattended
-
- DO NOT operate the pump unless the flues are fully covered with material hot enough to flow freely and the roof line is erected and fastened securely into place
- DO NOT "thaw" plugged pipe while in place. Dismantle first and heat on the ground

Note: Operators of equipment must be trained, demonstrate operational competency and/or have received approval from their immediate supervisor. Operators must be wearing the proper PPE as required and be familiar with the location of the nearest exit, first aid station and fire extinguisher.

Procedure

1) Conduct a pre-starting inspection of equipment and work area

a) Make sure work area on ground is free of debris, clutter and flammables

b) Make sure area on roof is free of debris and clutter; fall protection must be in place (guardrails) or personnel on roof must be using a harness and lifeline

c) Ensure that all equipment being used to erect the tar supply pipe has been inspected and is in good working condition; if using hoists, make sure they have been set up following safe job procedures

d) Make sure the tar pipes, couplers and unions are in good condition and the pipes are not plugged

2) Determine the length of pipe required to supply tar to the roof level

a) Use a tape measure or a length of rope; do **not** use a lifeline for this purpose.

b) Measure from the kettle output to the required height on the roof; make sure kettle has been set up using safe job procedure

Procedure **(con't)**

3) Assemble the required length of rope

a) Choose an area on the ground that is flat and level so that pipes will assemble without cross threading

b) Use a tiger torch to heat couplings and unions so that pipes will thread sufficiently; observe safe work procedure for operating a propane torch

c) Make sure that the pipes are chained or wired at the couplings

d) Keep the pipe line to the roof as short and vertical as possible and run a rope from the valve to the roof

4) Raise the pipe into position

a) Depending on the length of pipe, a rope, hand hoist or power hoist may be used to lift the pipe

b) Have personnel on the ground to guide the pipe while it is being raised, to keep it away from the wall of the building

c) When pipe is at sufficient height, guide the bottom end onto the union at the kettle output. MUST wear gloves.

d) Tighten the union sufficiently with a pipe wrench to avoid leaks (use heat from the tiger torch as necessary)

e) Pipe lines over 50 feet should always be supported

5) Secure pipe at roof level

a) Depending on the building or parapet detail, the foreman of the crew will choose an appropriate method to secure the pipe in place (wire, clamps etc…)

b) Ensure there are guardrails present at 1.22 m (4 ft) on either side of the pipe

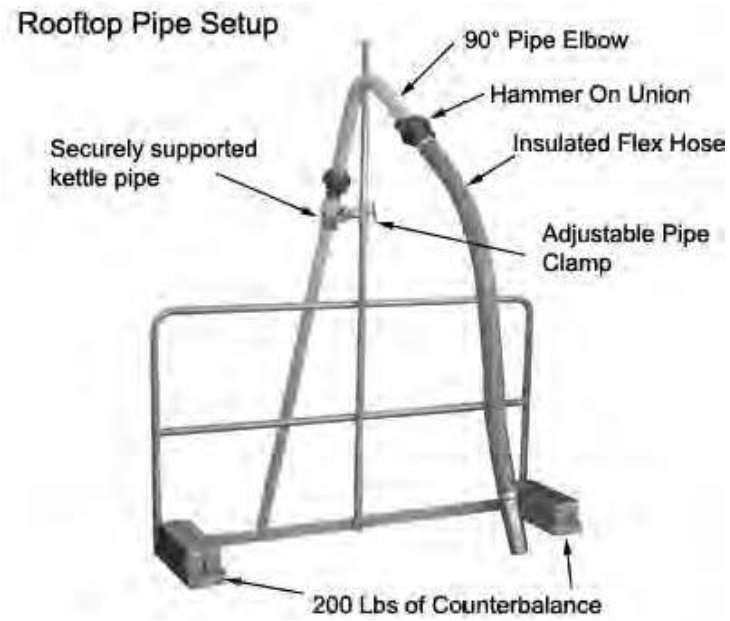

Please contact Safety Coordinator @ 506-576-6683, if you have any questions regarding what is expected for the procedure or for clarification

The information contained in this publication is intended for general use and may not apply to every circumstance. It is not a definitive guide to government legislation and does not relieve persons using this publication from their responsibilities under the Workplace Safety and Health Act or applicable legislation.
The appropriate regulations and statutes should always be consulted and adhered to. Atlantic Roofers Limited/North Shore Roofing Ltd. and its affiliates do not guarantee the accuracy of, nor assume liability for the information presented here.

Roofing Kettle – Set-up / Use / Shut down

JP # 50

General

Roofing kettles are designed and manufactured for heating of roofing asphalt and coal tar pitch of the types and grades which can be melted by directly applied heat. Misuse of this equipment could result in damage or injury.

Hazards Present

• Burns	• Fires	• Explosions

Protective Mechanisms

• Manufacturers Recommendations • Burn proof gloves	• ERP (Emergency Response Plan) • Face Shield • Protective Clothing	• Safe Work Practices/Procedures • Training

Do

- DO have training to operate kettle
- DO Wear appropriate PPE including Face Shield
- DO set up kettles on level ground, clear of debris and flammable materials
- DO use a hand held thermometer to periodically check the melt temperature
- DO inspect all equipment prior to use. Record on daily Inspection Form.
- DO open exhaust stack cover before firing the burner
- DO use caution when lighting burners. On a bright day the flame may not be visible
- DO keep the outside of kettle clean. A build-up of asphalt can create a fire that is very difficult to extinguish
- DO have a fully charged dry chemical fire extinguisher available at the kettle
- DO Only load asphalt that you can safely handle
- DO use extra caution when lowering cold product. Slowly lower product into the vat
- DO make sure burners are extinguished and fuel supplies are shut off before leaving a job site

Do Not

- DO NOT fire burners at full thrust until 150 mm (6 inches) of melt covers the heating tubes
- DO NOT use oversized burners in kettles. Tubes can become overheated, creating a fire or explosion hazard
- DO NOT panic if a fire occurs. Close kettle lids and turn off burners
- DO NOT load more asphalt than you can handle to prevent backsplash
- DO NOT leave kettle unattended
- DO NOT store combustible materials near the kettle
- DO NOT tow kettle when contents are above the “Towing Level” mark shown on the outside of the tank
- DO NOT tow at speeds in excess of 80 Km/h. Make certain the tow hitch and safety chains are properly attached
- DO NOT operate the pump unless the flues are fully covered with material hot enough to flow freely and the roof line is erected and fastened securely into place

Note: Operators of equipment must be trained, demonstrate operational competency and/or have received approval from their immediate supervisor. Operators must be wearing the proper PPE as required and be familiar with the location of the nearest exit, first aid station and fire extinguisher.

Procedure

1) Conduct a pre-starting inspection of equipment and work area

a) Make sure that kettle and all related equipment (torches, propane tanks, fire extinguishers etc…) have been inspected and are in good working condition before they leave the yard.

b) Check with supervisor as to location of kettle set-up.

c) Make sure set-up area is free of debris, clutter and flammables.

2) Park the kettle

a) Choose a firm level area as far away as is practical from the building and it's fresh air intakes.

b) Provide plywood or other adequate ground coverage to protect property from tar stains.

c) Make sure the legs of the kettle are down to prevent tipping and the wheels are blocked to prevent rolling.

d) If set up area is close to entrances or public access, provide barriers, signs, fencing etc… as per supervisors instructions.

e) Stack kegs neatly so they are in a convenient location for the kettle operator.

3) Open lid and inspect contents of kettle

a) Make sure lid of kettle is secure in open position (block open if necessary).

b) Check inside of kettle for moisture or debris and remove if found.

c) If the level of tar in the kettle is below the heating flues, add tar to the kettle; do not light an empty kettle. Asphalt level should be kept at least 2" above the level of the tubes at all times.

4) Connect propane tank

a) Unlock gas bottles.

b) Ensure there is no smoking in propane storage area.

c) Store propane bottles clear of open flame – at least 6 meters (20 feet) from kettle – and secure in an upright position.

d) Thread base coupler onto tank. Do not over tighten.

e) Check valve & hoses for leaks.

5) Lighting the burners

a) Open the exhaust stack covers.

b) Place the burners on the ground, pointing away from the kettle or any combustible material. Remember that the propane flame is difficult to see on a bright day.

c) Make certain that the Globe Valve (at burner) is closed and adjust the LPG Regulator to 25 psig. Open the valve on the propane tank only slightly.

d) Use a striker (no matches or lighters) to ignite the generating coil while opening the globe valve. The globe valves provided with the ASE kettle are designed to be used in either the fully open or fully closed position. They should not be used in a partially open position to regulate gas flow.

e) Open the valve on the propane tank fully.

f) Readjust the regulator pressure to 25 psig and using welding gloves, insert the burner into the burner well.

Procedure **(con't)**

6) Bring tar up to required temperature

a) Burners should not be fired at full thrust until at least 150 mm (6 inches) of melt covers the heating tubes.

b) When heating cold material, the temperature of the melt should be slowly raised to the desired level.

c) Monitor temperature of the tar with a thermometer. Working temperature of asphalt will range from 190°C to 218°C (375°F to 425°F).

d) Asphalt should not be heated over 260°C to 274°C (500°F to 525°F) for more than four hours and must never be heated above 274°C (525°F) EXCEEDING 500°F could result in flash fires in the kettle.

7) Start pump motor (See JP #15 - Set up of Tar Supply Line)

a) Wear long sleeve shirt and gloves. Do not wear loose clothing or other materials that could become entangled in moving parts.

b) Remove any obstacles.

c) Pull cord to start motor.

8) Adding tar

a) Place block of tar on its side and use utility knife to cut and remove the entire paper/plastic wrap. Remove all separated debris to the containment area or dumpster.

b) Using an axe (visually inspect for defects prior to use), cut the block into smaller pieces. Smaller pieces melt quicker.

c) Add tar as required by slowly lowering product into vat. Open door on kettle and set piece of asphalt on the lip of the kettle. Slide asphalt piece into the kettle slowly to avoid a splash. Do not throw in. Do not overfill. Level of tar should be no more than 4 to 6 inches from the top of the kettle.

9) Shut down – End of Day

a) Shut off the valve at the propane bottle.

b) Allow the gas in the hose to burn off then shut off the burner valve.

c) Use a wrench to remove the coupler from the propane bottle.

d) Secure all propane bottles in an upright position and as per SWP # 38 and Provincial Regulations.
- NB OHSA & Reg 91-191 (Jul 1, 2011) Part VIII, Section 74 to 79
- NS OHSA & Reg S.N.S. 1996, c.7 (Jun 12, 2013) Part 5, Section 45 to 49
- PE OHSA General Reg EC180/87; 43/06 (Jan 2013) Part 37, Section 37.17 to 37.23
- NL OHSA Reg 5/12 (Jan 2012) Part XXI, Section 448, 450, 453

e) Close exhaust stack covers and lock up the engine cover, burner well cover, lids and drain cock to help prevent theft or vandalism.

10) Shut down – End of Job

a) Towards the completion of the roofing job, the foreman must advise the kettle operator to allow the level of tar in the kettle to go down to allow safe movement of the kettle after the job.

b) Make sure the drain cock and lid are locked if the kettle will be remaining at the jobsite overnight.

11) Conduct a post operation inspection

a) If any wear, damage or malfunction is noticed, notify supervisor so the problem can be corrected before the kettle is used again.

b) Maintain good housekeeping. Once the kettle is pulled out from the site, pick up all debris and ground cover material; rake the area if necessary.

12) Towing

a) Do not tow kettle when contents are above the "Towing Level" mark shown on the outside of the tank. To do so may cause splashing and place undue stress on the tires and running gear.

b) Check the manufacturer's instructions for the maximum towing speed. (Some kettle models do vary, usually between 60Km/h and 80Km/h). Make certain that the tow hitch and safety chains are properly attached.

c) Connect brakes and lights before traveling with the kettle.

13) *Initial Response to a Hot Tar Injury and First Aid*

a) Prepare for emergencies. Train personnel in first aid. Keep a source of cool water available to immerse a burn injury. Have a plan to help an injured worker off the roof.

b) Make sure the injury scene is safe before rescuing or administering first aid to an injured worker (e.g., ensure that the injured worker can be accessed without walking on slick tar).

c) Do not unnecessarily move an injured person, further injury may result. If the person is unconscious check for an open airway and pulse. If needed, begin rescue breathing or CPR.

d) If the injured worker has tar in his/her eyes, flush with cool, clean, low-pressure water or saline. All eye injuries should be evaluated by a physician as soon as possible.

e) If tar is on skin, **cool the tar immediately with large amounts of water** to prevent the burn from going deeper.

f) Do not use gasoline to remove tar, this may cause a chemical burn, be absorbed systemically and cause organ damage! Removing the tar is not a medical emergency. Tar should only be removed by a medical professional.

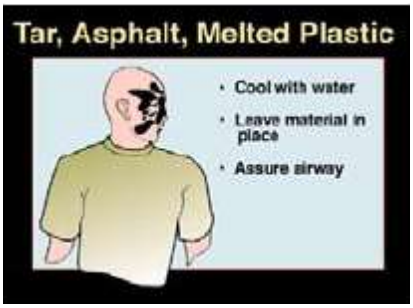

Please contact Safety Coordinator @ 506-576-6683, if you have any questions regarding what is expected for the procedure or for clarification

The information contained in this publication is intended for general use and may not apply to every circumstance. It is not a definitive guide to government legislation and does not relieve persons using this publication from their responsibilities under the Workplace Safety and Health Act or applicable legislation.
The appropriate regulations and statutes should always be consulted and adhered to. Atlantic Roofers Limited/North Shore Roofing Ltd. and its affiliates do not guarantee the accuracy of, nor assume liability for the information presented here.

General

The dangers associated with kettles are very real. These vessels contain materials, such as hot asphalt or coal tar, that need to be handles with extreme care. It is important to always follow safety requirements. **Always wear the proper PPE**.

Hazards Present

• Burns	• Fires	• Tar Spills

Protective Mechanisms

• Manufacturers Recommendations • Burn proof gloves	• ERP (Emergency Response Plan) • Face Shield • Protective Clothing	• Safe Work Practices/Procedures • Training

Do

- DO make sure area on ground is free of debris, clutter and flammables
- DO use appropriate PPE including fall protection for workers on the roof
- DO make sure the pipes are clean and dry and all joints and unions are in good condition and secure
- DO inspect all equipment prior to use. Record on daily Inspection Form.
- DO maintain communication with person on the ground
- DO have a fully charged dry chemical fire extinguisher available at the kettle
- DO tie off the pipe to a guardrail or other support immediately after placing it on the roof

Do Not

- DO NOT clean a pipe by heating it with a propane torch. The pipe can explode
- DO NOT attempt to move tar kettle once fired
- DO NOT panic if a fire occurs. Close kettle lids and turn off burners
- DO NOT leave kettle unattended
-
- DO NOT operate the pump unless the flues are fully covered with material hot enough to flow freely and the roof line is erected and fastened securely into place
- DO NOT "thaw" plugged pipe while in place. Dismantle first and heat on the ground

Note: Operators of equipment must be trained, demonstrate operational competency and/or have received approval from their immediate supervisor. Operators must be wearing the proper PPE as required and be familiar with the location of the nearest exit, first aid station and fire extinguisher.

Procedure

1) Conduct a pre-starting inspection of equipment and work area

a) Make sure work area on roof is free of debris, clutter and flammables.

b) Fall protection must be in place (guardrails) or personnel on roof must be using a harness and lifeline.

c) Ensure that the lugger and other equipment has been inspected and is in good working condition. Be sure to inspect vent on lugger before use.

d) Make sure the tar pipes, couplers and unions are in good condition and the pipes are not plugged.

2) Secure pipe at roof level

a) Depending on the building or parapet detail, the foreman of the crew will choose an appropriate method to secure the pipe in place (wire, clamps etc…).

b) Guardrails should be erected at least 1.22 m (4 ft) on either side of the pipeline.

c) Insulating the pipes, especially during cold weather or where the pipe is extended a substantial distance, helps to maintain proper bitumen temperature and control excess fumes.

d) The end of the pipe should be connected to a 90 degree elbow pipe and a flexible discharge hose.

Procedure **(con't)**

3) Secure pipe at roof level

a) Depending on the building or parapet detail, the foreman of the crew will choose an appropriate method to secure the pipe in place (wire, clamps etc…).

b) Guardrails should be erected at least 1.22 m (4 ft) on either side of the pipeline.

c) Insulating the pipes, especially during cold weather or where the pipe is extended a substantial distance, helps to maintain proper bitumen temperature and control excess fumes.

d) The end of the pipe should be connected to a 90 degree elbow pipe and a flexible discharge hose.

4) Prepare to release tar into lugger on roof

a) Always make sure there is no water or moisture in the lugger. Keep the filler neck covered when not in use.

b) Never fill a lugger or mop bucket more than three-quarters full. Anything over this limit is easy to splash or spill.

c) Always chock the wheel or set the brakes while filling the lugger.

d) Always check the path of travel and make sure it is level and clear of debris before moving the lugger.

e) Be sure the lugger's wheels are free of debris and can turn easily to minimize the possibility of it overturning.

f) Make sure the tap on the lugger is closed fully before filling.

g) Operators must wear appropriate PPE.

h) Fire extinguisher must be in close proximity at all times.

5) Release of asphalt to lugger

a) Put lugger under supply so the pipe is inside the lugger.

b) Always PULL lugger, do not push.

c) Stay 6 to 8 feet away from the lugger while it is being filled.

d) Kettle Operator to pull supply line to fill. To prevent overflow on roof

e) When full, lugger will smoke from the vent. Other option is to tie the filling process.

6) Transfer of asphalt from lugger to mop cart

a) With gloves on, pull hot lugger to mop cart area.

b) Always PULL hot lugger, do not push.

c) Line up the mop cart under the lugger tap.

d) Open tap on lugger to release tar. Tap may have to be heated before opening.

e) Close tap when mop cart is full.

f) When lugger is empty, make sure tap is closed before filling and pull pin out to make sure it sits upright.

Please contact Safety Coordinator @ 506-576-6683, if you have any questions regarding what is expected for the procedure or for clarification

The information contained in this publication is intended for general use and may not apply to every circumstance. It is not a definitive guide to government legislation and does not relieve persons using this publication from their responsibilities under the Workplace Safety and Health Act or applicable legislation.
The appropriate regulations and statutes should always be consulted and adhered to. Atlantic Roofers Limited/North Shore Roofing Ltd. and its affiliates do not guarantee the accuracy of, nor assume liability for the information presented here.

General

Protecting employees and general public from injuries and dangers associated with the erection and use of metal scaffolds.

Hazards Present

• Ergonomic (force & posture)	• Pinch Points	• Pulled Muscles
• Fall from Height	• Falling Objects	• Electrocution

Protective Mechanisms

• Manufacturers Recommendations	• ERP (Emergency Response Plan)	• Safe Work Practices/Procedures
• Proper Lifting Techniques	• PPE	• Training

Do

- DO read and follow manufacture instructions
- DO wear appropriate PPE
- DO make sure scaffold is erected, altered and dismantled by or under supervision of qualified workers
- DO inspect daily before use
- DO make sure scaffold can withstand 4 times the maximum load likely to be imposed on it

Do Not

- DO NOT jump on planks or work platforms
- DO NOT work outdoors in a storm or high winds
- DO NOT climb or stand on cross braces or guardrails
- DO NOT use ladders or makeshift devices on top of scaffolds to increase height
- DO NOT permit persons to stand directly below a scaffold
- DO NOT mix parts from different manufacturers

Procedure

1) Scaffold selection and inspection

a) Wear appropriate personal protective equipment.

b) Select the appropriate scaffold system for the job. Consider the height required, type and duration of work, range of weather conditions, weight of workers, materials and equipment, the location and requirements for pedestrian traffic.

c) Inspect all of the scaffolding components to ensure they are in good condition and suitable for the job. Do not use any damaged or defective scaffold component; take it out-of-service, attach a warning tag and advise your supervisor.

d) Ensure the sills are not split or rotten and are a suitable size and strength to support the loads without settlement or deformation.

e) Ensure the adjustable bases have no thread damage and the base plates are not curled or warped.

f) Ensure the jackscrews have no cracks in the weld where they attach to the top of the caster, no thread damage and the adjusting nut is tight.

g) Ensure the end frames have no cracks in the welded joints, the top and bottom cross-members have no kinks or dents, legs are plumb and square, brace locks are in good working condition and coupling pins are in place and secured to the frame.

h) Ensure the cross-braces are straight with no bent ends, the pivot connection is in good working order and there is no excessive rust.

i) Ensure the platform decks are not cracked, locks are working, all bolts and screws are in place and there are no burns or broken ends.

Procedure **(con't)**

1) Scaffold selection and inspection (con't)

j) Ensure the planks have no split ends, saw cuts, notches, protruding nails or excessive warping and no contamination (such as oil, chemicals or burns) that could affect the integrity of the planks.

k) Ensure the guardrails are straight with no kinks, dents or excessive rust.

l) Ensure the casters are the same size and from the same manufacturer, wheels rotate and swivel well, brake mechanism works properly, wheel treads have no damage, wheel diameter is not less than 13 cm and one set of wheels is the swivel type.

m) A damaged scaffold component shall not be used until it has been effectively repaired.

2) Work site inspection and conditions

a) Scaffolds should be erected by two or more workers.

b) Check the location for ground conditions, overhead electrical wires, other hazards, obstructions, changes in elevation and tie-in problems.

c) A metal scaffold located in proximity to a high voltage energized electrical conductor or equipment must be effectively grounded where a hazardous level of electrical charge is likely to be induced in the scaffold.

d) Clear the work area of debris and other objects.

e) Set up barricades and warning signs wherever necessary.

3) Set up

a) The base for the scaffold must be firm and level enough to support the load of the scaffold, workers and materials. Sills and base plates are required on any soil or unstable ground condition or where any leveling adjustment is needed. The lower ends of the scaffold frames must be supported by firm and adequately sized foundations or sills. Ensure the scaffold feet are centrally located on the sills.

b) Ensure the casters and wheels of a rolling scaffold are effective locked.

c) Connect the first cross-brace to the frame. Allow the frame to lean slightly forward and rest the brace on the ground.

d) Secure the first cross-brace to the second frame.

e) Install the second cross-brace to both frames. Level and plumb the scaffold. Start at the highest point of the scaffold and use the jack-nut to lower this corner. Adjust the other three corners so the frames are level with each other. Do not exceed the adjustment limits specified by the manufacturer. Ensure the castor height adjusting screws do not extend more than two-thirds of the total length or 30 cm (11 ¾"), whichever is the lesser. Fasten the base plate to the sills.

f) Install and secure the decking units.

g) Assemble additional tiers/levels in the same manner. A worker at ground level should pass the necessary scaffold components to the worker on the work platform. A rope should be used to raise components above the second tier. End frames must be installed so the integral built-in ladder rungs are consistently positioned. Ensure the stacked frames are properly seated on the couplers.

h) Complete the platform fully at each level before assembling the next level. Do not move the platform decks until the new end frames have been set in place and cross braces are installed.

i) If the height of the scaffold exceeds 3 times its minimum base then it must be effectively guyed or secured to a building or structure as per the OH&S Regulations.

j) If the height of a free-standing tower or rolling scaffold exceeds 3 times its minimum base dimension then outriggers must be installed on both sides of the scaffold structure. If the scaffold is adjacent to a structure then it must be braced against the structure and outriggers used on the opposite side.

k) Install guardrails on all open sides and ends of a platform that is 1.22 m (4 ft) or more above grade or floor level. The top rail must be placed 0.9 m to 1.1 m (36 to 40 in.) above the work surface. An intermediate rail must be placed halfway between the top rail and the working surface. Guardrails are not required on the side adjacent to the structure if the open space between the work platform and structure is 30 cm or less.

Procedure **(con't)**

4) Set up (con't)

l) Install toeboards on all open sides of the work platform if it is possible for tools or materials to roll off. The top of the toeboard must be at least 10 cm (4 in.) above the platform. If loose materials are to be stacked above the height of the toeboard then it must be increased in height or mesh panels must be installed.

5) Usage

a) Inspect the scaffold daily before use and after a modification.

b) If your work boots are muddy then clean the soles. Avoid climbing with wet soles. Ensure your footwear is in good condition.

c) Face the ladder when climbing up or down.

d) Maintain a firm grip. Use both hands when climbing.

e) Maintain three point contact by keeping two hands and one foot, or two feet and on hand on the ladder at all times.

6) Dismantling and maintenance

a) Ensure the structure will remain stable at all times.

b) Clear the platform of all materials and debris before dismantling.

c) Proceed in the reverse order of erection.

d) Dismantle each tier completely before starting on the one below.

e) Work from the full platform decks while removing braces and frames.

f) Remove any jammed or rusted components with caution. Tugging or pulling on stuck parts can cause a loss of balance.

g) Check and maintain all scaffold parts. Repair or discard any damaged pieces immediately.

h) Lubricate moving parts of all fittings.

Please contact Safety Coordinator @ 506-576-6683, if you have any questions regarding what is expected for the procedure or for clarification

The information contained in this publication is intended for general use and may not apply to every circumstance. It is not a definitive guide to government legislation and does not relieve persons using this publication from their responsibilities under the Workplace Safety and Health Act or applicable legislation.
The appropriate regulations and statutes should always be consulted and adhered to. Atlantic Roofers Limited/North Shore Roofing Ltd. and its affiliates do not guarantee the accuracy of, nor assume liability for the information presented here.

General

The purpose of this procedure is to provide a code of practice for all employees who find themselves working alone or after hours.
The procedure applies to all employees who work alone / after hours.

Hazards Present

• Minor Injury	• Severe Injury	• Death

Protective Mechanisms

• PPE	• Manufacturers Recommendations	• Training

Equipment / Tools Required

• Full Body Harness	• Energy Absorbing Lanyard/ Self-Retracting Lanyard	• Guardrails
• Anchor Point that can withstand 5000 lbs.	• Rope Grab / Lifeline	• Safety Monitor

Do

- DO use the "buddy" system where possible
- DO perform a visual check of the parking lot to ensure that it is safe before exiting your vehicle
- DO report all situations, incidents or "near misses" where working alone increased the severity of the situation
- DO ensure that all doors are locked upon leaving the vehicle to enter the building
- DO enter the building through the main door and complete the required security process of the building
- DO ensure you have a way of communication with your supervisor at all times

Do Not

- DO NOT schedule high risk tasks after normal business hours
- DO NOT park your vehicle "out of site". park vehicle in a common area (example: front of building)
- DO NOT travel without emergency supplies in the vehicle (food, clothing, 1st aid kit)
- DO NOT enter enclosed areas
- DO NOT work alone without appropriate training for the conditions and task
- DO NOT work alone or remotely without a form of communication

Procedure

1) **Explanation**
   a) The purpose of this Code of Practice (COP) is to ensure that all Atlantic Roofer Limited employees, contractors and subcontractors engaged in working alone are working safely whether performing hazardous work, travelling or at risk of violence.

2) **Definition**
   a) Individuals are alone at work when on their own; they cannot be seen or heard by another worker; cannot expect a visit from another worker or member of the public for some time; and/or where assistance is not readily available when needed.

3) **Identified Hazardous Situations**
   a) Workers who travel away from base office to meet clients.
   b) Workers who do hazardous work but have no routine interaction with customers or the public.
   c) Workers who travel alone but have no routine interaction with customers or the public. This includes business people in transit.
   d) Workers who are at risk of violent attack because their workplace is isolated from public view.

Procedure **(con't)**

4) Workers performing hazardous work

a) Assess the hazards of the workplace.
b) Investigate incidents at the workplace, and those from similar workplaces.
c) Avoid working alone whenever possible, especially for jobs with a recognized risk.
d) Ensure you have the appropriate training and equipment for the situation and task.
e) Report all situations, incidents or "near misses" where working alone increased the severity of the situation.
f) Call a co-worker when you arrive and just before you leave the work area.
g) Make sure you check in with the co-worker at pre-determined times. Tell your co-worker the nature of the work you will be performing and when you expect to be finished.
h) Have the name, address and telephone number of where you are working.
i) Make sure you have a company provided phone if on a job site or other means of reliable communication.
j) Ensure all safe work practices and procedures are available and on hand.
k) Always have appropriate first aid kit and emergency supplies on hand at a work site.
l) Ensure you are familiar with emergency procedures.

5) Workers travelling alone

a) Workers must have full concentration on the road when traveling alone.
b) Allow sufficient rest time for workers who are traveling on long trips.
c) Well-maintained vehicles prevent exposure of workers to unnecessary risk.
d) Appropriate first aid and emergency supplies should be provided.
e) Let a co-worker know your approximate travel plan. Call in if you expect to be late.

Please contact Safety Coordinator @ 506-576-6683, if you have any questions regarding what is expected for the procedure or for clarification

The information contained in this publication is intended for general use and may not apply to every circumstance. It is not a definitive guide to government legislation and does not relieve persons using this publication from their responsibilities under the Workplace Safety and Health Act or applicable legislation.
The appropriate regulations and statutes should always be consulted and adhered to. Atlantic Roofers Limited/North Shore Roofing Ltd. and its affiliates do not guarantee the accuracy of, nor assume liability for the information presented here.

General

This Job Procedure describes the use of a control zone as an acceptable means of fall prevention.

Hazards Present

• Minor Injury	• Serious Injury	• Death

Protective Mechanisms

• PPE	• Manufacturers Recommendations	• Training/Supervision

Equipment / Tools Required

• 8' North Shore Roofing Rails	• High Visibility Vests	• Warning Signs

Do

- DO ensure that fall protection plans are site specific and address the type of equipment used at the workplace
- DO inspect all equipment before each use
- Do remove from service if defects are found
- DO read and understand manufacturer's instructions
- DO use caution around moving machinery, electrical hazards and chemical hazards
- DO have a rescue plan and the ability to implement a rescue. Training should be provided on a periodic basis

Do Not

- DO NOT alter or intentionally misuse equipment
- DO NOT install or use if you have not been trained in its correct application and use
- DO NOT throw or drop any equipment from building or heights
- DO NOT use any equipment or tools if defects are found

Procedure

1) **Directions**
   a) **A control zone may be used as the means of fall protection under OHS Reg.'s, section 29 where work is being done at a distance greater than 2 metres from the edge of a roof.**
   b) Where work is being done from the edge of a roof or within 2 metres of the edge of a roof that has a slope of less than 3/12, an appropriate means of fall protection must be used. (eg: travel restraint or fall arrest)
   c) Use of a control zone is not permitted on a working surface where the slope of the surface exceeds 3 vertical inches in 12 horizontal inches or for scaffolds.
   d) A control zone cannot be used if the level working surface on which work is being performed is **less than 4 metres wide.**

2) **Definitions** (See Figure 1)
   a) **Control Zone** means the area between an unguarded edge of a building or structure and a line which is set back a safe distance of at least two meters (6.5 feet).
   b) **Raised Warning Line** is a warning method that provides a visual and physical reminder of the presence of a hazard. (eg: Fall hazard)

***Procedure* (con't)**

3) Width of the Control Zone

a) Must be at least two metres (6.5 feet), with additional distance if any of the following conditions exists:

i. The working surface is slippery or sloped.

ii. The work is carried out at an elevation relative to the unguarded edge.

iii. The risk is increased by the use of equipment near the control zone.

b) Only workers directly required for the work at hand should be inside the control zone with the use of an appropriate means of fall protection as per 1b.

4) Raised Warning Line (See Figure 1)

a) A raised warning line must be put in place *prior* to work starting.

b) A line defining the control zone is to be established and in use at all times during such work.

c) An acceptable raised warning line is the use of North Shore Roofing rails consisting of:

i. 1" x 1" x 3/16" HSS square rails at 8 feet long

ii. All potential work areas require a defined working "zone"

iii. No less than 3 rails linked together linearly with a 90 degree termination rails at both ends of run

iv. Both 90 degree termination rails must be inwards (eg: toward the work area or away from the roof edge.)

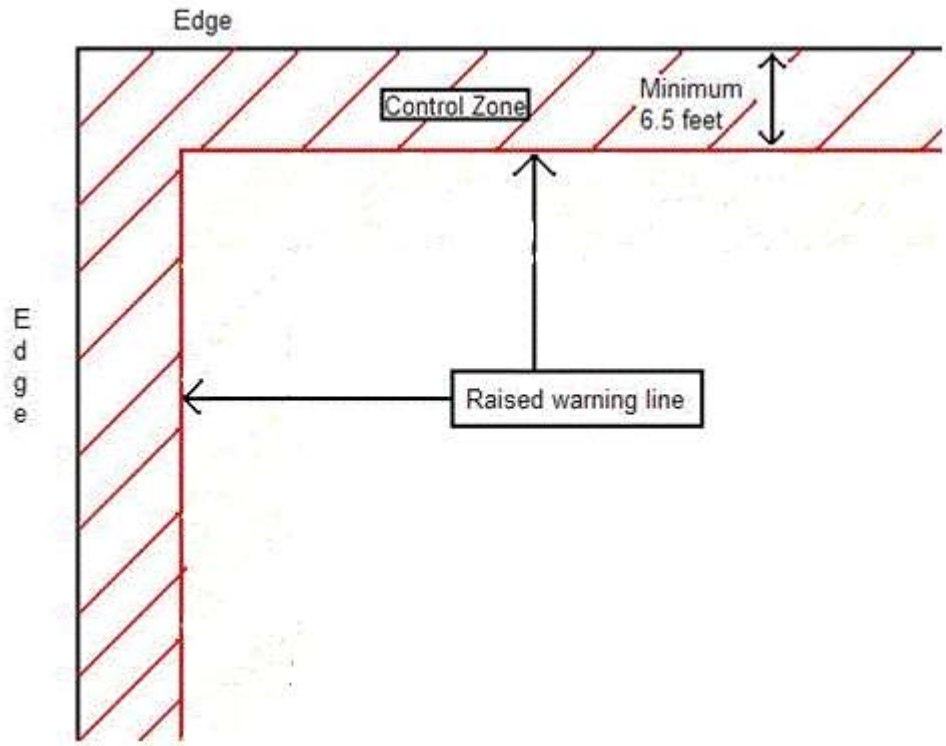

Figure 1

***Procedure** (con't)*

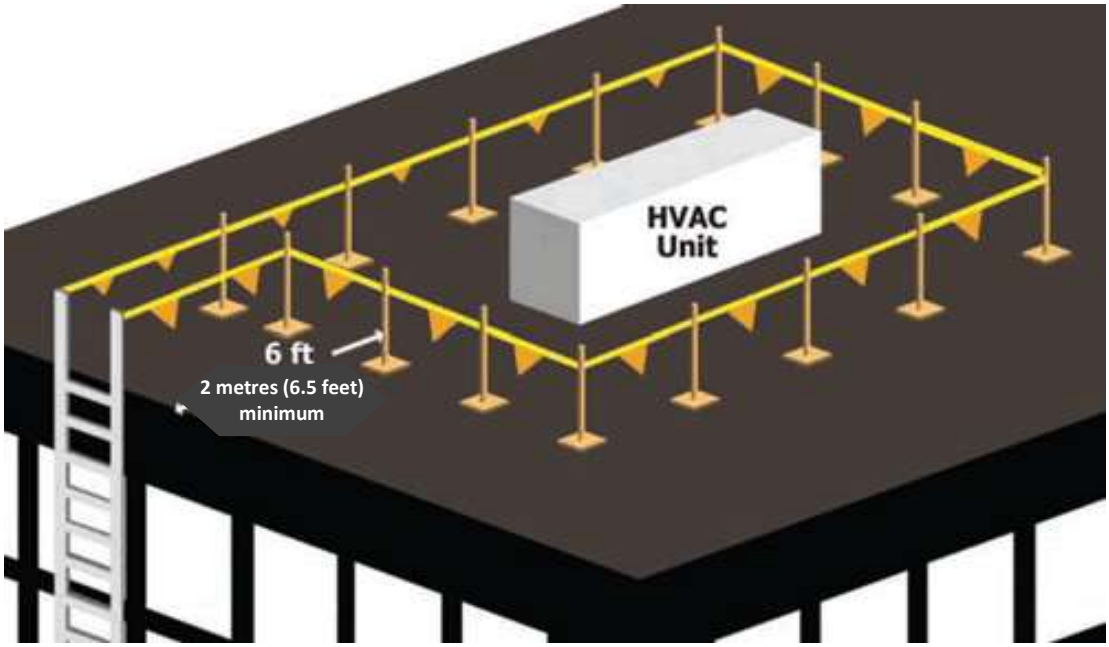

REFERENCES:
Form F-02-2 Fall Protection Plan

Please contact Safety Coordinator @ 506-576-6683, if you have any questions regarding what is expected for the procedure or for clarification

The information contained in this publication is intended for general use and may not apply to every circumstance. It is not a definitive guide to government legislation and does not relieve persons using this publication from their responsibilities under the Workplace Safety and Health Act or applicable legislation.
The appropriate regulations and statutes should always be consulted and adhered to. Atlantic Roofers Limited/North Shore Roofing Ltd. and its affiliates do not guarantee the accuracy of, nor assume liability for the information presented here.

General

This Job Procedure applies to all managers, supervisors, forepersons, employees, subcontractors, and visitors of Atlantic Roofers Limited/North Shore Roofing jobsite.

Hazards Present

• Minor Injury	• Serious Injury	• Death

Protective Mechanisms

• PPE	• Manufacturers Recommendations	• Training/Supervision

Equipment / Tools Required

• Appropriate length of ladder	• Lifelines/Rope grabs	• Warning Signs

Do

- DO ensure that fall protection plans are site specific and address the type of equipment used at the workplace
- DO inspect all equipment before each use
- Do remove from service if defects are found
- DO read and understand manufacturer's instructions
- DO use caution around moving machinery, electrical hazards and chemical hazards
- DO have a rescue plan and the ability to implement a rescue. Training should be provided on a periodic basis

Do Not

- DO NOT alter or intentionally misuse equipment
- DO NOT install or use if you have not been trained in its correct application and use
- DO NOT throw or drop any equipment from building or heights
- DO NOT use any equipment or tools if defects are found

Procedure

1) Directions

When a worker falls and is suspended in a harness, it's important to rescue him or her as quickly as possible because of the following reasons:

a) The worker may have suffered injuries during the fall and may need medical attention.

b) When workers are suspended in their safety harnesses for long periods, they may suffer from blood pooling in the lower body. This can lead to suspension trauma.

c) Suspended workers may panic if they are not rescued quickly**.**

d) The event that led to the fall may create additional risks that need to be addressed.

2) Emergency Response Plan

Note: It's important to know your role.

a) The foreman (or alternate foreperson) takes control of the situation.

b) The foreman alerts all workers in the immediate vicinity by yelling out – EMERGENCY. STOP WORK. All workers in the immediate vicinity of the incident stop working. The foreman quickly evaluates the situation and identifies any further hazards that could arise.

Procedure (con't)

c) The foreman or their designate goes to get help if workers are close by. If no one is close enough, the foreman calls for help.

2) Emergency Response Plan (con't)

a) The foreman calls 911 to notify local police, fire, and ambulance if required.

b) If pre-arranged with the operator, the crane operator remains on standby. The operator frees the hook and waits for further direction in case the designated rescue team must perform a basket rescue.

c) The foreman (or a worker assigned to the task) isolates the accident zone and its perimeter to limit further exposure.

d) The foreman (or a worker assigned to the task) moves all non-affected personnel to a safe zone or directs them to remain where they are.

e) The foreman enables cell phone/radio silence on the jobsite, except for crisis communications from emergency responders. These communications are conducted on a cell phone.

f) The foreman sends a designated worker to the site gate to meet the response team (police, medical, fire, etc.) and ensure that they have a safe access path to the accident scene.

g) The foreman assembles the emergency rescue team at the accident site as quickly as possible to determine the best rescue procedure for the situation.

3) Rescue Procedures

The following rescue procedures are ordered (A) through (D), with (A) being the preferred method and (D) being the method used when there is no other means of rescue.

A) **Elevating Work Platform Rescue**—If an elevating work platform (EWP) is available on site and the suspended worker can be reached by the platform, follow the procedure below.

i. Bring the EWP to the accident site and use it to reach the suspended worker.

ii. Ensure that rescue workers are wearing full-body harnesses attached to appropriate anchors in the EWP.

iii. Ensure that the EWP has the load capacity for both the rescuer(s) and the fallen worker. If the fallen worker is not conscious, two rescuers will probably be needed to safely handle the weight of the fallen worker.

iv. Position the EWP platform below the worker and disconnect the worker's lanyard when it is safe to do so. When the worker is safely on the EWP, reattach the lanyard to an appropriate anchor point on the EWP if possible.

v. Lower the worker to a safe location and administer first aid. Treat the worker for suspension trauma and any other injury.

vi. Arrange transportation to hospital if required.

B) **Ladder Rescue**—If an elevating work platform is not available, use ladders to rescue the fallen worker with the procedure outlined below:

i. If the fallen worker is suspended from a lifeline, move the worker (if possible) to an area that rescuers can access safely with a ladder.

ii. Set up the appropriate ladder(s) to reach the fallen worker.

iii. Rig separate lifelines for rescuers to use while carrying out the rescue from the ladder(s).

iv. If the fallen worker is not conscious or cannot reliably help with the rescue, at least two rescuers may be needed.

. If the fallen worker is suspended directly from a lanyard or a lifeline, securely attach a separate

Procedure (con't)

lowering line to the harness.

vi. Other rescuers on the ground (or closest work surface) should lower the fallen worker while the rescuer on the ladder guides the fallen worker to the ground (or work surface).

3) Rescue Procedures (con't)

B) **Ladder Rescue**—If an elevating work platform is not available, use ladders to rescue the fallen worker with the procedure outlined below:

vii. Once the fallen worker has been brought to a safe location, administer first aid and treat the person for suspension trauma and any other injury.

viii. Arrange transportation to hospital if required.

C) **Rescue from Work Area or Floor Below**—If the fallen worker is suspended near a work area and can be safely reached from the floor below or the area from which they fell, use the following procedure:

i. Ensure that rescuers are protected against falling.

ii. If possible, securely attach a second line to the fallen worker's harness to help rescuers pull the fallen worker to a safe area. You will need at least two strong workers to pull someone up to the level from which they fell.

iii. Take up any slack in the retrieving line to avoid slippage.

iv. Once the worker has been brought to a safe location, administer first aid and treat the person for suspension trauma and any other injury.

v. Arrange transportation to hospital if required.

D) **Basket Rescue**—If a worker has fallen and is suspended in an inaccessible area, you may need to perform a basket rescue:

For basket rescues, the basket must be designed by a professional engineer in accordance with good manufacturing processes to withstand all loads to which it may be subjected. It must be kept on site at all times in an accessible location where it is clear of material or other equipment. Fit the rescue basket with appropriate rigging for quick hookup by the crane operator.

Always keep the following items in the rescue basket:

i. First-aid kit
ii. Three lanyards equipped with shock absorbers
iii. One full-body harness
iv. Tag line attached to the basket at all times
v. Descent controller rescue device in good working condition
vi. Secondary safety line to tie the basket above the headache ball of the crane

To perform a basket rescue, follow the steps below:

1) Make sure preferred methods A, B, and C are not possible.
2) Notify the crane operator right away to position the crane to attach the basket.
3) While the basket is being attached, the crew leader checks that all safety rigging is done and all the required safety equipment is available.
4) With two rescuers in the basket, hoist it to a position that is above and as close as possible to the fallen worker. A designated worker on the ground guides the basket with a tag line. The designated worker must make sure that when the rescue basket reaches the right elevation, the door of the basket is facing the structural steel to provide an easy exit for rescuer #1.
5) Rescuer #1 exits the rescue basket and gets into a position to reach the fallen worker. When doing

***Procedure* (con't)**

6) this, rescuer #1 must be tied-off at all times to either the structure or the rescue basket.
7) Rescuer #2, who is still in the rescue basket, lowers the line that will be used to retrieve the worker. Rescuer #2 attaches an extra lanyard to the line if required.

Rescuer #1 assesses the fallen worker for injuries and then decides how to proceed (i.e., treat injuries first, guide the fallen worker into the rescue basket, or lower the basket to the ground with the fallen worker attached to it).

3) Rescue Procedures (con't)

E) **Basket Rescue** (con't):

To perform a basket rescue, follow the steps below: (con't)

8) Once the fallen worker has been brought to a safe location, administer first aid. Treat the person for suspension trauma and any other injury.
9) Arrange transportation to hospital. A designated worker must accompany the injured worker to hospital.

If the basket rescue is the method used, keep the following points in mind

- Perform a basket rescue only when it is not possible to use conventional equipment to rescue the fallen worker in a safe manner.
- Never exceed the maximum number of workers in the basket as indicated on the nameplate.
- Ensure that a competent worker inspects the crane and equipment being used prior to lifting rescuers.
- Always equip the crane with a fail-safe mechanism to prevent the boom from descending in the event of a power source or system failure.
- Maintain an adequate means of communication between the rescuers in the basket and the crane operator at all times. Ensure that workers in the rescue basket wear full-body safety harnesses attached to a lanyard and anchored to appropriate points in the basket at all times.
- Make sure that all rigging used to attach the rescue basket to the hook of a load line has a safety factor of 10 against failure. There should be a safety line attached to the load line directly from the basket.
- Do not allow cranes to travel while rescuers are in the basket.
- Do not use suspended rescue baskets during high winds, electrical storms, snow, ice, sleet, or other adverse conditions that could affect the safety of personnel on the platform or in the basket.

4) Post Rescue Procedure

All non-affected workers should remain in the designated safe gathering zone until the site supervisor notifies them to do otherwise**.**

The foreman and safety coordinator should:

a) Begin the accident investigation.
b) Quarantine all fall-arrest equipment that may have been subjected to fall fatigue effects and/or shock loading for further investigation.
c) Secure the area (the OHSA requires that an accident scene not be disturbed where a fatal or critical injury has occurred).
d) Determine whether or not the jobsite-specific rescue and evacuation plans were followed as designed.
e) Record modifications or additions to the plans that the rescue team deems necessary.
f) Record all documented communications with fire, police, MOL, and other contractors involved. (When a fall occurs and is arrested, you must notify the MOL in writing.)
g) Record all documented statements from employees, witnesses, and others.
h) Save all photographs of the incident.
i) Record all key information such as dates, time, weather, general site conditions, and specific accident locales including sketches of the immediate incident area, complete with measurements if applicable.

Please contact Safety Coordinator @ 506-576-6683, if you have any questions regarding what is expected for the procedure or for clarification

The information contained in this publication is intended for general use and may not apply to every circumstance. It is not a definitive guide to government legislation and does not relieve persons using this publication from their responsibilities under the Workplace Safety and Health Act or applicable legislation. The appropriate regulations and statutes should always be consulted and adhered to. Atlantic Roofers Limited/North Shore Roofing Ltd. and its affiliates do not guarantee the accuracy of, nor assume liability for the information presented here.

General

This Job Procedure applies to all persons who use or service this heater. Failure to comply with instructions can result in death, serious bodily injury and property loss. The MINI-MACADEN 1000 was manufactured to mechanize the torch application of the Soprema thermoweldable membrane designed to waterproof roofs that require protection from air or water.

Hazards Present

• Death	• Serious Bodily Injury	• Property Loss
• Fire / Burns	• Explosion	• Electrical Shock

Protective Mechanisms

• Heat Resistant Safety Gloves	• Eye Protection	• Hearing Protection (Unit emits a sound level of 90 decibels)
• Manufacturers Recommendations	• Training/Supervision	•

Equipment / Tools Required

• Fire Extinguisher	• Propane Tank	• Gasoline
• 2 Assistant Operators		

Do ✓

- DO read and understand manufacturer's instructions and safety warnings
- DO inspect all equipment before each use
- DO always wear eye protection, hearing protection and heat resistant safety gloves
- DO keep the propane gas line away from construction traffic and contact with hot surfaces during use & storage
- DO always keep the unit at a distance of at least 3.3 m (10 ft) from any propane tank
- DO keep the unit at least 1.22 m (4 ft) from combustible materials
- DO keep all doors on the unit closed and locked

Do Not ✗

- DO NOT alter or intentionally misuse equipment
- DO NOT use the unit without attaching the two fire extinguishers, in good working order, to the housing
- DO NOT start the engine without performing the pre-operation checks
- DO NOT use the unit on a hot air duct system
- DO NOT operate the unit in the dark
- operate the unit without the safety guards in place
- DO NOT turn the gas engine off before the temperature of the air at the nose outlet has cooled to 40 deg. or less.
  Doing do will cause the membrane to ignite instantly.

Procedure

1) Before you Operate the MINI-MACADEN 1000

a) For safe use, the MINI-MACADEN 1000 requires one operator and two assistant operators.

b) Make sure you understand the manufacturer's operation manual.

c) Keep the work area clean. Remove obstacles that could cause personal injury to the operator or others.

d) NEVER stop the unit during membrane application when the burner is operating. Doing so will cause the membrane to ignite instantly. If this should occur, PUSH THE BURNER SAFETY PUSH BUTTON and use the extinguishers on the side of the housing to put out the fire.

e) Do not operate the unit on a sideways slope of more than 10 degrees (2 in 12).

f) Read all safety warning labels before operation.

Procedure **(con't)**

2) Familiarize yourself with the unit

a) Compare the illustrations with the unit to familiarize yourself with the location of the parts. (Fig.1 & 2)

b) Compare the illustrations with the unit to familiarize yourself with the controls and settings. (Fig.3)

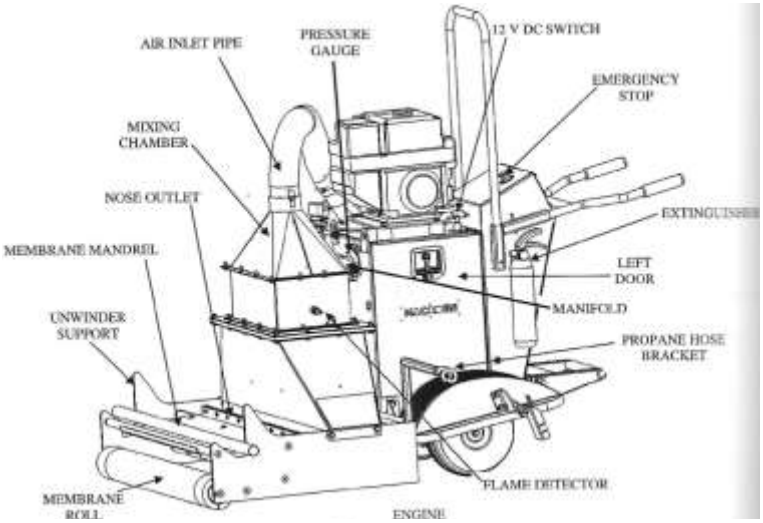

Fig. 1

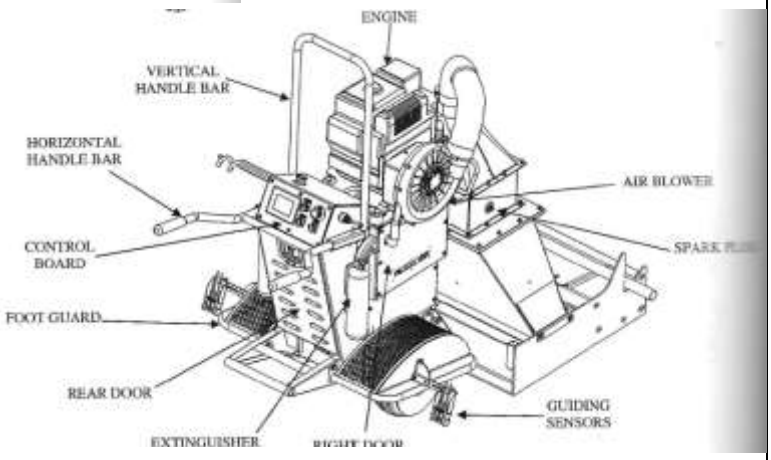

Fig. 2

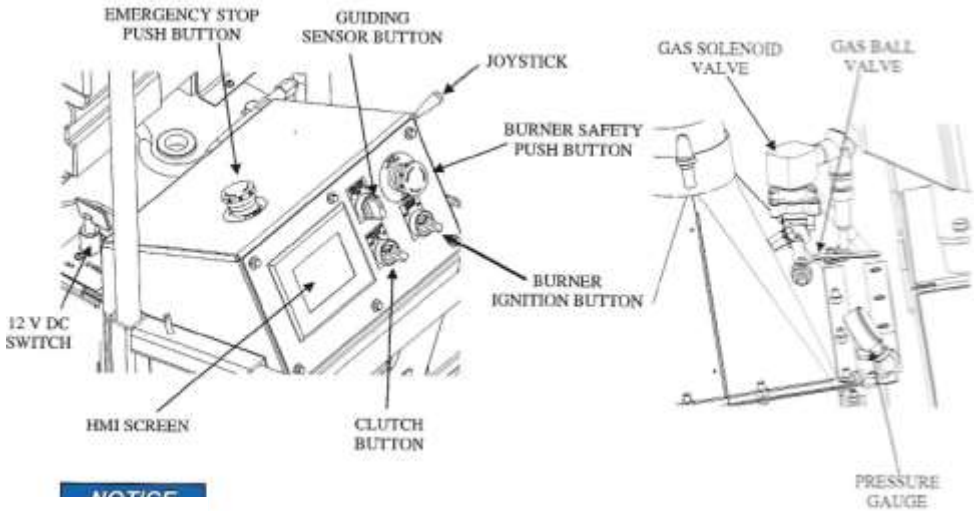

Fig. 3

Procedure **(con't)**

3) Conduct a pre-starting inspection of equipment and work area

a) Check the roof and deck for deterioration before allowing personnel or equipment access to the roof. Make certain the roof and structure is strong enough to support the weight of workers, materials and equipment.

b) Fill the gas tank.

c) Check the engine oil according to the manufacturer's instructions.

d) Visually inspect the propane gas line. If it shows signs of excessive wear or is cut, it must be replaced before starting the burner.

e) Check along the length of the gas lines for leaks using the soap test.

f) The propane tank capacity must be 45kg (100 lbs)

g) Check that bolts, nuts and other fasteners are tight.

h) Check that the unit has not been damaged during its previous use.

i) Refer to the maintenance manual for general inspection.

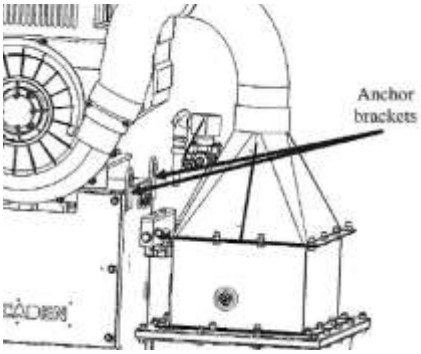

Fig. 4

4) Lift the Machine to the Roof (Or loading on a trailer)

a) Inspect the hoist.

b) Make sure everyone on the ground is completely clear of the hoisting area.

c) Consult your "Hoisting" Job Procedure for complete hoisting procedures.

d) Use the anchor brackets attached to the side of the unit. (Fig. 4)

e) Leave the clutch engaged.

f) Put the support mandrel under the unit to prevent pressure on the pressure roller that might create a permanent deformity. (Fig. 5)

g) If loading on trailer, secure unit to trailer with straps.

h) Keep the engine level during transport to reduce the risk of fuel spillage.

i) Set the fuel shut-off valve to the "OFF" position during transport. (Fig. 6)

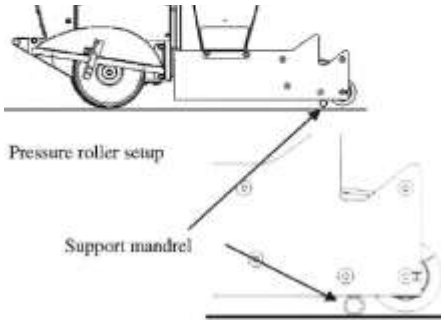

Fig. 5

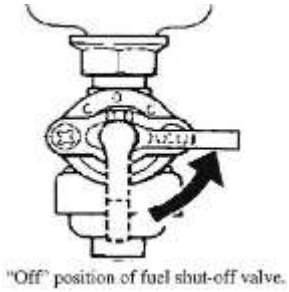

Fig. 6

5) Operation

a) Pre-operation Checks

i) Check that the propane gas line is connected to the propane inlet fitting on the unit. (See "Gas Ball Valve" – Fig. 3)

ii) Check that the propane gas line is on its bracket.

iii) Check that the propane gas line is connected to the tank.

iv) Open the propane inlet valve on the tank.

v) Open the propane inlet valve on the unit.

vi) Check that the pressure gauge does not exceed 103 kpa (15 psi).

vii) The unit must be at least 3m (10 ft) from any propane gas tank.

viii) The unit must not be pointed directly at a propane tank located within 6m (20 ft).

Procedure **(con't)**

5) Operation (Con't)

b) Burner Safety Push Button (Fig.7)

i) Never stop the unit during membrane installation when the burner is operating because the membrane will ignite instantly.

ii) Should the membrane ignite or another problem occur, push the Burner Safety Push Button to immediately shut off the burner.

iii) To restart the burner, lift the Burner Safety Push Button.

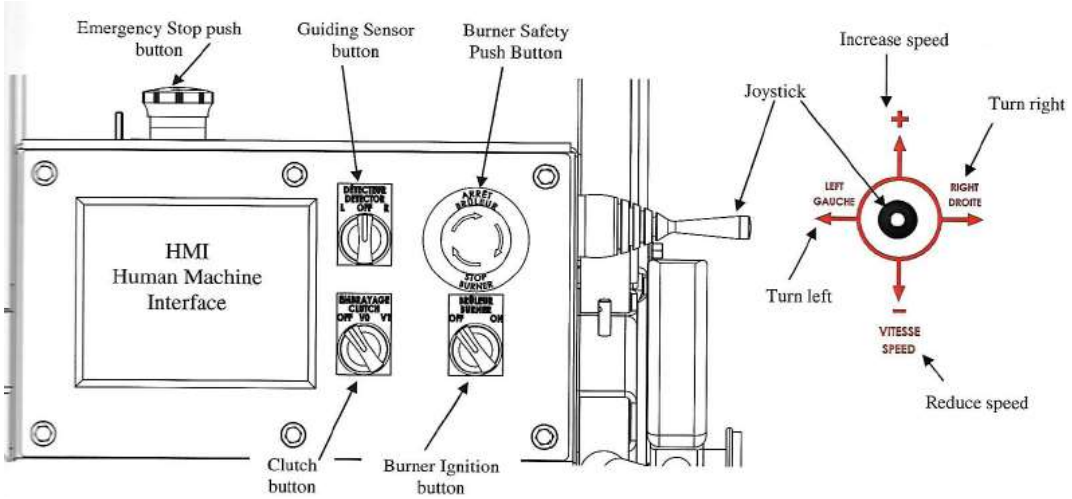

Fig. 7

c) Speed (Fig. 7)

i) The speed is indicated on the display. When the clutch button is at "V_1", the speed displayed is the operation speed at start-up.

ii) To increase the travelling speed of the unit, move the joystick up.

iii) To reduce the travelling speed of the unit, move the joystick down.

d) Guiding the unit

i) **Manual** – To maintain a straight path during straight-lined membrane installation, **turn to the right** by moving the **joystick towards the engine** or **to the left** by moving the **joystick towards the operator**.

ii) **Automatic** – To maintain a straight path during straight-lined membrane installation in automatic mode, set the guiding sensors button to the "R" or "L" position.

6) Starting up the unit

a) Make sure the Emergency Stop Push Button is in the "up" position.

b) Turn the 12 V DC switch to the "on" position.

c) Start the engine using the following procedure:

i) Turn the fuel shut off valve to the "on" position.

ii) **If the engine is cold**:

(1) Set the throttle halfway between the "slow" and "fast" positions.

(2) Set the choke lever to the "on" position.

iii) **If the engine is hot**:

(1) Set the throttle halfway between the "slow" and "fast" positions.

(2) You do not need to use the choke.

Procedure **(con't)**

6) Starting up the unit (con't)

d) **For pull start engines:**

i) Turn the fuel shut-off lever to the "ON" position.

ii) Turn the Electric engine starter switch to the "ON" position.

iii) Pull the handle of the cord SLOWLY until it has gone past the compression zone – STOP.

iv) Return the cord handle, pull firmly and smoothly (do not jerk), to start. Pull the coed straight out from the unit to prevent excessive wear on the pull-start cord.

v) Pull the cord out to its full length periodically to check its condition. If the cord is frayed, replace t immediately.

e) **For an electric start engine**

i) Turn the key switch to "Start" and hold in this position to electrically crank engine until it starts, then release the key.

ii) NOTE: If engine fails to start after cranking for 10 seconds, release the key and allow a 60 second cool down period to prevent burning out the starter motor.

7) Preparation, installation and thermowelding of the membrane roll

a) Place the membrane roll on the ground in a vertical position with the overlap strip to the top.

b) Remove the 3 adhesive strips from around the roll.

c) Insert the mandrel into the roll. **(Fig. 8)**

d) **Make sure the burner is off by pushing down the Burner Safety Push Button** (yellow push button).

e) Place the roll with the mandrel into the unwinder support.

f) Unroll approximately 1.2 m (4ft) of the membrane.

g) Insert the end of the membrane between the burner nose outlet and the membrane guide.

h) While the operator lifts the pressure roller by pressing down on the handles of the unit, one of the assistant operators runs the membrane under the pressure roller and about 30 cm (1ft) past it. **(Fig. 9)**

i) Line the unit up with the membrane roll to ensure good longitudinal coverage and good edge overlap.

j) **Starting in manual mode**

i) Lift Burner Safety Push Button (yellow push button)

ii) Turn the clutch button (green button) to V_0.

iii) Start the burner using the burner ignition button (red button).

iv) When smoke begins to appear, turn the clutch button (green button) to "V_1" to reach the pre-programmed speed.

v) To keep the unit on its path during a rectilinear installation, **turn to the right** by moving the **joystick towards the engine** or **to the left** by moving the **joystick towards the operator.**

vi) To maintain even bleed-out **(Fig. 10)**, adjust the speed of the unit by moving the joystick up to increase speed or down to reduce speed.

vii) During this time, the assistant operators oversee the installation of the membrane, making sure that all safety rules are obeyed (e.g: propane gas supply line is not in the path of the unit) and warning the operator of any irregularities that could cause injury or defects.

Fig. 8

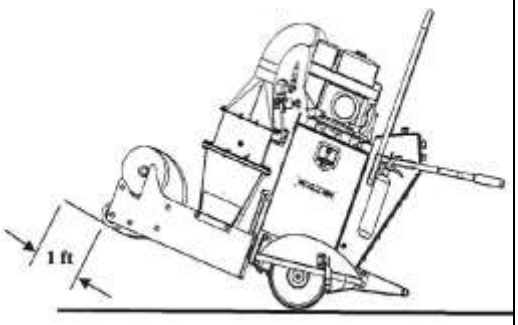

Fig. 9

Procedure **(con't)**

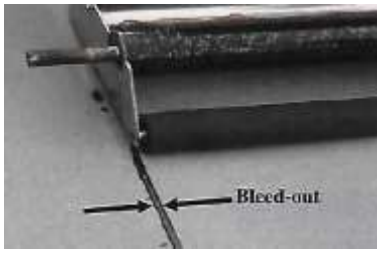

Fig. 10

8) Preparation, installation and thermowelding of the membrane roll (con't)

j) **Starting in manual mode (con't)**

viii) When you come to the end of the membrane roll, turn the burner ignition switch to "OFF" (red button).

k) **Starting in automatic guiding mode**

i) Make sure that the Burner Safety Push Button (yellow button) is in the up position.

ii) Turn the guiding button (black) to "R" or "L".

iii) Turn the clutch button (green button) to V_0.

iv) Start the burner using the burner ignition switch (red button).

v) When smoke begins to appear at the nose outlet, turn the clutch button (green button) to "V_1" to reach the pre-programmed speed.

vi) A rectilinear membrane installation is maintained by an automatic guiding system.

vii) To maintain even bleed-out **(Fig. 10)**, adjust the speed of the unit by moving the joystick up to increase speed or down to reduce speed.

viii) During this time, the assistant operators oversee the installation of the membrane, making sure that all safety rules are obeyed (e.g: propane gas supply line is not in the path of the unit) and warning the operator of any irregularities that could cause injury or defects.

ix) When you come to the end of the membrane roll, turn the burner ignition button to "OFF" (red button).

NEVER LEAVE THE BURNER RUNNING WHEN THE UNIT IS STOPPED. DOING DO WILL CAUSE THE MEMBRANE TO IGNITE INSTANTLY.

IN CASE OF FIRE:

1. PRESS THE BURNER SAFETY PUSH BUTTON
2. MOVE THE UNIT AWAY FROM THE FIRE
3. CLOSE THE GAS VALVE AT THE UNIT
4. CLOSE THE PROPANE GAS VALVE AT THE PROPANE TANK
5. USE THE FIRE EXTINGUISHERS TO PUT OUT THE FIRE

9) How to shut off the unit

a) Close the propane supply valve on the unit.

b) Close the valve on the propane tank.

c) Shut off the engine as follows:

i) Set the throttle control to the "Slow" position.

ii) Let the engine run on slow for 30 to 60 seconds.

iii) Turn the key switch to "Off".

iv) Set the 12 V DC circuit breaker to the "Off" position. This isolates the battery from the electronic components when the unit is completely shut down.

v) Put the support mandrel under the unit to avoid pressure on the pressure roller that will create a permanent deformity. **(See Fig.5)**

10) Maintenance – See User's Manual for maintenance schedule and instruction.

Please contact Safety Coordinator @ 506-576-6683, if you have any questions regarding what is expected for the procedure or for clarification

The information contained in this publication is intended for general use and may not apply to every circumstance. It is not a definitive guide to government legislation and does not relieve persons using this publication from their responsibilities under the Workplace Safety and Health Act or applicable legislation.
The appropriate regulations and statutes should always be consulted and adhered to. Atlantic Roofers Limited/North Shore Roofing Ltd. and its affiliates do not guarantee the accuracy of, nor assume liability for the information presented here.

General

Drum/Pail Heaters are designed to provide practical, efficient means of freeze protection, viscosity control and maintenance of materials at elevated temperatures.

Hazards Present

• Explosion	• Serious Bodily Injury	• Property Loss
• Fire / Burns	• Death	• Electrical Shock

Protective Mechanisms

• Manufacturers Recommendations	• Eye Protection	• Training/Supervision

Equipment / Tools Required

• Fire Extinguisher	• Propane Tank	• Band Heater

Do

- DO read and understand manufacturer's instructions and safety warnings
- DO inspect heater before use
- DO fasten heater to device using approved methods only
- DO disconnect heater when not in use
- DO use specified sized heater with same sized drum. Do not use for other applications
- DO keep volatile or combustible material away from heater when in use
- DO keep sharp metal objects away from heater

Do Not

- DO NOT alter or intentionally misuse equipment
- DO NOT immerse heater in liquid
- DO NOT handle the heater while it is in operation. Disconnect from power source and allow to cool.
- DO NOT operate a heater without a temperature control device
- DO NOT wrap the heater over itself
- DO NOT operate heater above rated temperature value
- DO NOT repair faulty or damaged heaters
- DO NOT crush or apply severe physical stress on heater or cord assembly

Procedure

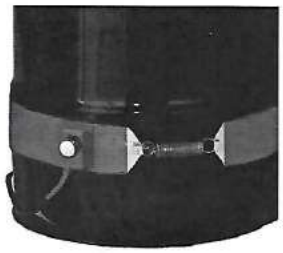

1) **Before installing band heater**
   a) Check for suspected damage to the heater like rips, punctures, etc.
   b) Verify surface to be heated is free from all sharp edges, weld splatter, rust, oil, etc.
   c) Check that the desired placement of the heater will not cause damage to the heater through impact shock, vibration, ambient temperature, or by neighboring moving parts.
   d) Confirm voltage / wattage rating of heater is appropriate for power supply device or temperature controller. **The heater is designed to work at a specific voltage to heat properly.**
   e) Confirm heater maximum exposure temperature rating is suitable for environment. **The temperature of the internal heating element may run up to 25% higher than the external surface of the heater.**
   f) Do NOT connect to AC power until all installation steps are completed.

2) **Installation of heater**
   a) Verify propane cylinder surface is clean, free from all sharp edges, weld splatter, rust, oil, etc.
   b) Place heater at the bottom of the propane cylinder. (below the lowest expected content level).

Procedure **(con't)**

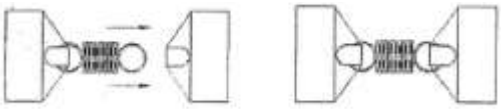

Fig. 1

2) Installation of heater (con't)

c) Wrap the heater around the propane cylinder.

d) Extend the spring attached to the metal tab; latch the spring loop onto the hook on the opposite side. **(Fig.1)**

e) Verify there are no air gaps between the heater and the propane cylinder.

NOTE: Do not use metal tab as a handhold when extending the spring.
The heater MUST make continuous contact with the cylinder.
Do not overlap the heater onto itself or another heater.

3) Turning on and using the heater

a) Adjust the dial to the desired setting. This will be approx. **300 degrees F,** in any range of cold temperature, for the purpose of this procedure.

If the heater is set at too high of a temperature the propane will turn to a liquid state and cause the torch to shoot a very long flame (approx. 10 feet)

b) Turn temperature dial to **OFF** when on break and lunch.

4) Shutdown and storage

a) Disconnect the heater unit at end of day.

b) Store heater belt in a clean, dry plastic bucket with a snap on cover. Store out of weather in a clean dry environment.

5) Troubleshooting

PROBLEM	SOLUTION
Does not heat	Verify heater is connected to proper voltage. The identification label located on the power cord displays the heater's voltage requirements. Check to see if there is a resistance reading (not an open circuit) in heater using ohm meter.
Circuit breaker is tripping	Validate that the circuit breaker is capable of handling the amp requirement of heater. The identification label located on the power cord displays the heater's amperage requirements. Examine heater and cord for any damage.
Does not fit	Confirm that the heater provided was designated to fit around your specified cylinder.
Something has lightly spilled on exterior or interior	Apply any general household cleaner, that does not contain any silicone rubber dissolving type ingredients, with a clean cloth fabric.

*** See Instruction Manual for more Troubleshooting contact information.**

Please contact Safety Coordinator @ 506-576-6683, if you have any questions regarding what is expected for the procedure or for clarification

The information contained in this publication is intended for general use and may not apply to every circumstance. It is not a definitive guide to government legislation and does not relieve persons using this publication from their responsibilities under the Workplace Safety and Health Act or applicable legislation.
The appropriate regulations and statutes should always be consulted and adhered to. Atlantic Roofers Limited/North Shore Roofing Ltd. and its affiliates do not guarantee the accuracy of, nor assume liability for the information presented here.

General

The Miller Edge Fall Protection System is a portable engineered anchorage solution designed to protect decking/roofing crews from fall hazards. The Miller Edge reduces the need for a safety monitor or a temporary cable lifeline system on leading edge deck/roof construction.

Hazards Present

- Serious Injury
- Death

Protective Mechanisms

- PPE
- Manufacturers Recommendations
- Training/Supervision

Equipment / Tools Required

- Crane and/or Hoist
- Miller Edge
- Full Body Harness & Lanyard
- Rigging Equipment
- Ballast Weight
- Approved SRL
- Warning Signs/Tape or Barricades
-

Do

- DO ensure that fall protection plans are site specific and address the type of equipment used at the workplace
- DO inspect all equipment before each use
- Do remove from service if defects are found
- DO read and understand manufacturer's instructions
- DO use caution around moving machinery, electrical hazards and chemical hazards
- DO have a rescue plan and the ability to implement a rescue. Training should be provided on a periodic basis

Do Not

- DO NOT alter or intentionally misuse equipment
- DO NOT use if defects are found
- DO NOT install or use if you have not been trained in its correct application and use
- DO NOT throw or drop any equipment from building or heights
- DO NOT use on solid ice
- DO NOT use on uneven or sloped surfaces greater than 5% from the horizontal

Procedure

1) **Limitations**
   a) FLOOR STRUCTURE: The structure to which the unit is used must be no less than 5/8" (15.9mm) thick plywood and capable of supporting the weight of the system and the loads applied by the system in event of a fall. The surface must be even and no greater than a 5% grade from horizontal.
   b) SYSTEM CAPACITY: THE MAXIMUM NUMBER OF USERS IS 2 (TWO). Only 1 (one) user per individual anchor point is permitted. The capacities are based on maximum user's weight, including tools, clothing, etc. **Maximum capacity for each attachment point is 310 lbs. (140.6 kg). Do not exceed.**
   c) COMPONENT COMPATABILITY: Unit is designed for use with Miller retractables and approved components only. Only useMiller retractables and approved compatible connectors.

Procedure (con't)

2) Conduct a pre-starting inspection of equipment and work area

a) A competent person must perform an Annual Formal Inspection of the entire system and all components.

b) Check each component (i.e., wheels, anchorage points, jacks) for physical damages, cracks, wear, corrosion and workability.

c) Check all bolts for damages, cracks, looseness, wear, and corrosion.

d) Check to ensure that each push pin has been secured in place with a hitch pin and inspected for damage, worn, bent or broken parts.

e) Inspect for malfunctioning components, broken or missing pins and fasteners. Replace if necessary.

f) Inspect wheels to ensure that each rotates and moves freely and inspect for cuts, breaks, broken areas, excessive wear. Also, ensure that each wheel is securely fastened.

g) Inspect brake jacks to ensure that each works properly and is capable of raising the unit when crank handle has been rotated clockwise to a complete stop.

h) Inspect all welds throughout the unit for cracks, breaks, or corrosion.

i) Inspect system and all personal fall protection according to the manufacturer's instructions.

j) Inspect the roof area for trip hazards, openings, electrical hazards, etc.

k) Check the roof and deck for deterioration before allowing personnel or equipment access to the roof. Make certain the roof and structure is strong enough to support the weight.

l) Identify appropriate setup area on the roof.

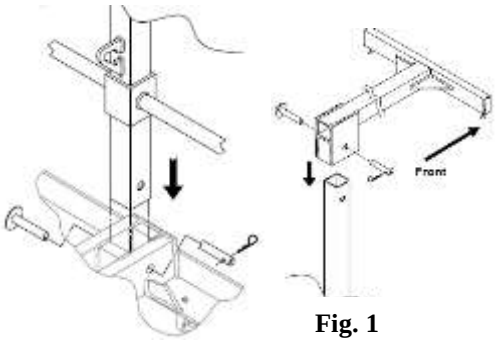

Fig. 1

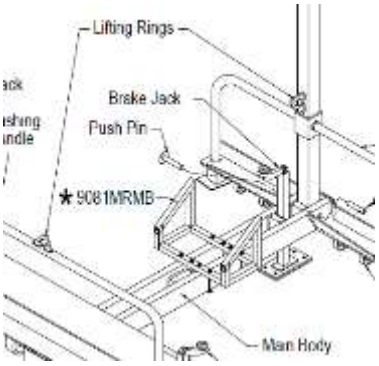

Fig. 2

3) Lifting the unit

a) Inspect to make sure the hitch pins are securely installed to the push pins. (Fig. 1)

b) Lift by using both of the lifting rings provided. (Fig. 2) DO NOT use lifting rings for fall protection.

c) Make sure everyone on the ground is completely clear of the hoisting area.

d) Consult your "Hoisting" Job Procedure for complete hoisting procedures before proceeding.

4) Installation Distance

a) Ensure the unit has been placed at a minimum of 2 feet from the front of the unit to the leading edge of the work surface and 3 feet from either side of the unit to the side edge of the work surface. (Fig. 3)

b) DO NOT use the unit if installed less than the required distance from the edge. Failure to do so may cause serious or fatal injury should a fall occur.

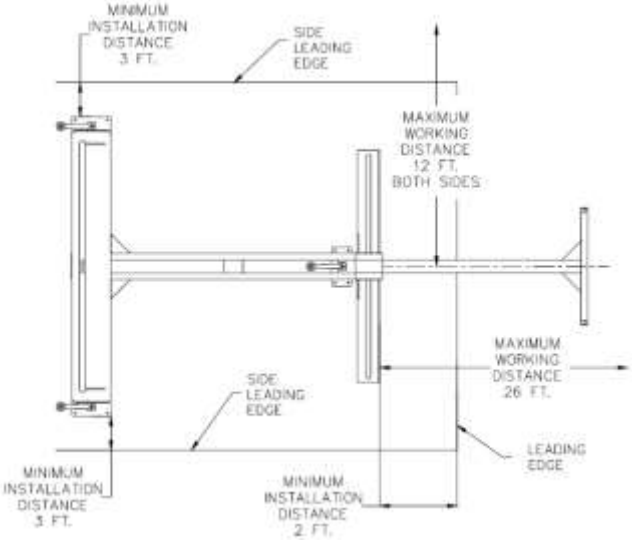

Fig. 3

***Procedure* (con't)**

5) Working Distance

a) The working distance is the maximum distance a user can work away from the system while anchored to the unit.
b) The maximum working **distance forward**, measuring from the vertical boom is **26 feet.**
c) The maximum working distance **from the side of the unit**, measuring from the vertical boom is **12 feet.**
d) **Do not exceed working distance requirements.**

6) General Operation

a) Put on a full body harness according to the manufacturer's instructions.
b) Once the installation and working distance requirements are understood and have been satisfied, lower each of the brake jacks completely by rotating the brake jack handle clockwise until each stops rotating. **Be sure to lower completely. Failure to do so could hinder the performance of the unit in the event of a fall and may cause serious or fatal injury.** (Fig. 4)
c) Install only Miller retractable lifelines and use personal fall protection according to the manufacturer's instructions.
d) The personal fall protection used with this device must limit the fall arresting forces to 900 lbs. (4 kN) or less and be rigged to limit fall distance to within regulatory requirements and prevent the user from striking a lower surface in the event of a fall.

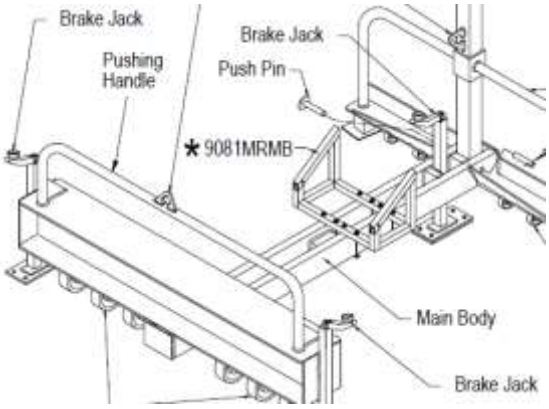

Fig. 4

7) Moving the unit

a) When the unit needs to be moved, disconnect each worker from the unit, raise each of the brake jacks completely by rotating the brake jack handle counter clockwise.
b) Move the unit by using the pushing handle located t the rear of the unit.
c) Steering the unit is accomplished by using the steering handles located on the vertical boom located at the front of the unit.
d) Never expose a worker(s) to a fall hazard by pulling the unit from the handles located on the vertical boom or from the anchorage points while connected to the unit.
e) Once the unit has been moved, lower each of the brake jacks completely by rotating the brake jack handle clockwise until each stops rotating.
f) Connect to the system by using one of the anchorage points located on the horizontal boom.
g) **Connectors used with this system must be able to support a minimum of 5,000 lbs (22kN). Non-approved, non-compatible components may cause disengagement (roll-out). Only self-locking, self-closing connectors are recommended.**

8) Cleaning

a) Periodically clean the unit using a damp cloth and a non-abrasive mild soap or detergent. Towel dry.

9) Storage

a) Before storing, clean the unit to remove any dirt, grease or other materials that may have accumulated.
b) Store in a clean dry area when not in use.

***Procedure* (con't)**

10) Servicing

a) Servicing must only be carried out by a qualified person trained in the inspection and replacement of this system.
b) This unit and all components of the system must be removed from service if subjected to fall arresting forces.

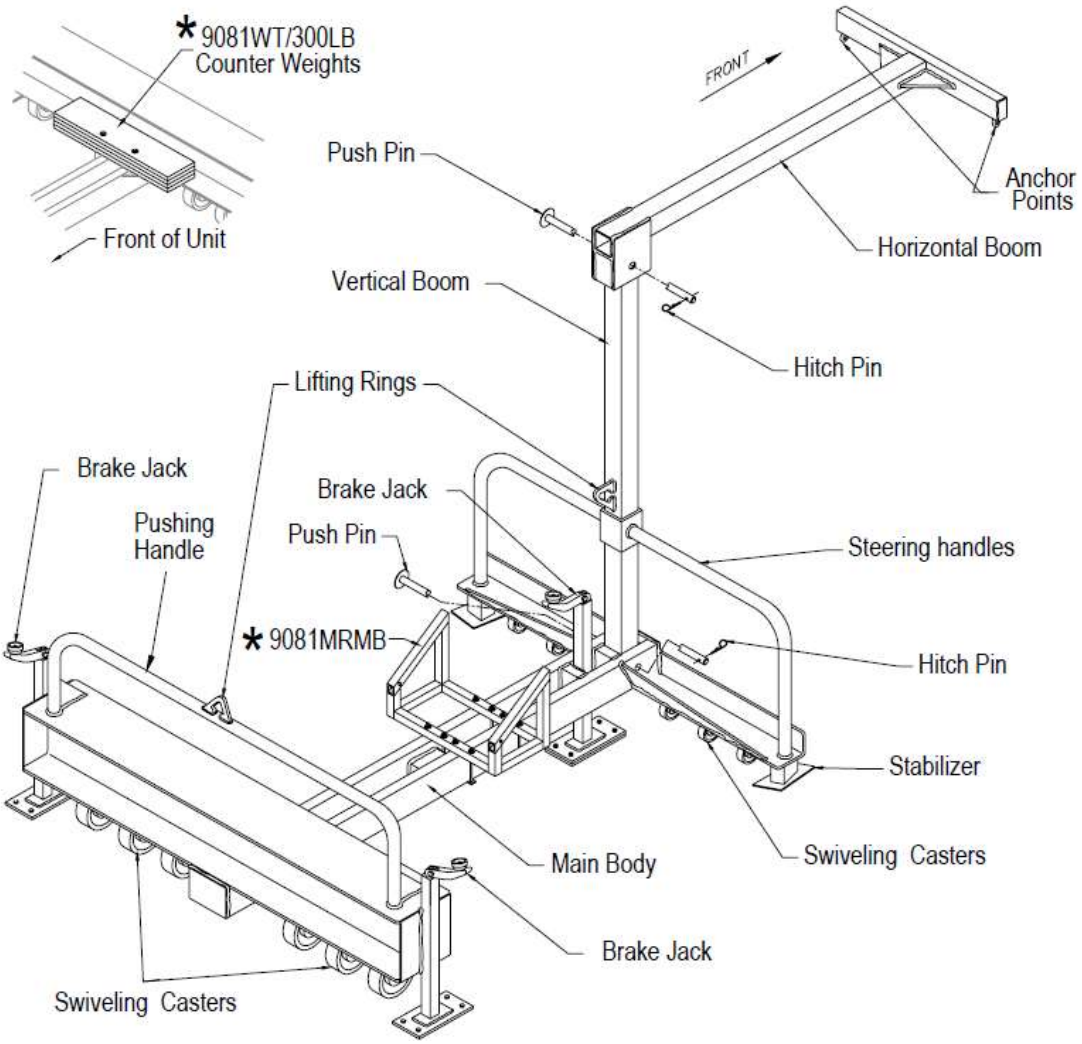

REFERENCES:
Form F-02-2 Fall Protection Plan

Please contact Safety Coordinator @ 506-576-6683, if you have any questions regarding what is expected for the procedure or for clarification

The information contained in this publication is intended for general use and may not apply to every circumstance. It is not a definitive guide to government legislation and does not relieve persons using this publication from their responsibilities under the Workplace Safety and Health Act or applicable legislation.
The appropriate regulations and statutes should always be consulted and adhered to. Atlantic Roofers Limited/North Shore Roofing Ltd. and its affiliates do not guarantee the accuracy of, nor assume liability for the information presented here.

PPE – Adjusting Fall Protection Harness

JP #59

General

To ensure a proper fit and adjustment of your fall protection harness. As well as to ensure that daily inspections are performed.

Hazards Present

- Property Damage
- Personal Injury
- Loss of Product

Protective Mechanisms

- Adjusters & Equipment
- Local, Regional & Federal Regulations
- Job Procedure
- Training

Do

- DO inspect all parts of the harness
- DO ensure all lanyards are tangle free
- DO double check connections

Do Not

- DO NOT use if defective in any way
- DO NOT leave ppe unattended on job site

Supervisor Responsibility

- Supervisors are responsible to ensure that all employees are wearing their harnesses
- Enforcement
- Compliance

Employee Responsibility

- Lift the harness by the back D-ring and untangle straps. Allow leg straps to hang free
- Don the harness as you would a jacket. Pass one arm through each of the shoulder straps keeping the fall arrest D-ring to the back. Position the shoulder straps evenly across the shoulders
- Reach down between the legs and grasp the left leg strap. Draw it up between the legs and attach the buckle to the torso of the harness. Repeat with the other leg strap
- Fasten the chest strap buckle. Adjust the chest strap so that it is located 15 cm (6 inches) below the shoulders before adjusting it for fit.
- Connect the chest strap by passing male buckle through female buckle. Pass excess webbing through loop keepers.
- Refer to the figure below and become familiar with adjusting procedure for each buckle type. Adjust shoulder straps to a snug fit. Left and right shoulder straps should be adjusted to the same length. Readjust leg straps, chest straps, and shoulder straps as necessary to a snug fit. Once adjusted, the chest strap should prevent the harness shoulder straps from slipping off the shoulder. Ensure that the sub pelvic strap is located beneath the buttocks at final adjustment. Center the back D-ring between the shoulder blades before use. It can be adjusted by pulling the web components through the D-ring pad in desired direction.
- Adjustment and fastening elements must be regularly checked before and during use.

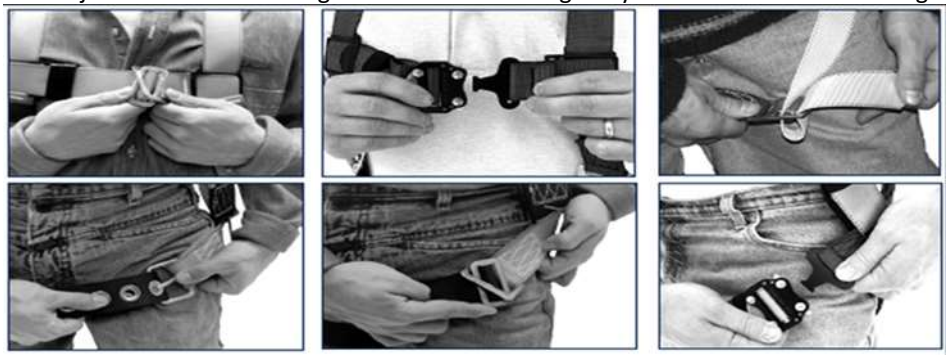

- Inspecting of the harness must inspect all hardware (buckles, D-rings, back pad, etc.)
- Harness and lanyard must not be:
  - Damaged
  - Broken
  - Distorted
- Must be free of:
  - Sharp edges
  - Burrs
  - Cracks
  - Worn parts
  - Corrosion
- Ensure buckles work freely
- Inspect parachute buckle spring
- Inspect webbing material must be free of:
  - Frayed, cut or broken fibers
  - Tears
  - Abrasions
  - Mold
  - Burns
  - Discoloration
- Inspect stitching:
  - Pulled stitches
  - Cut stitches
  - Broken stitches may be an indication that the harness or lanyard have been impact loaded and must be removed from service.
- Inspect impact indicator
  - If stitching is pulled, cut or broken; it may be an indication that the harness has been impact loaded and must be removed from service.
  - If the warning "UNIT HAS BEEN IMPACT LOADED REMOVE FROM SERVICE" remove from service immediately
- Inspect labels
  - All labels should be present and fully legible
- If inspection reveals a defective condition of any time, remove the harness or lanyard from service immediately and destroy

The information contained in this publication is intended for general use and may not apply to every circumstance. It is not a definitive guide to government legislation and does not relieve persons using this publication from their responsibilities under the Workplace Safety and Health Act or applicable legislation.
The appropriate regulations and statutes should always be consulted and adhered to. Atlantic Roofers Limited/North Shore Roofing Ltd. and its affiliates do not guarantee the accuracy of, nor assume liability for the information presented here.

4.3 Safe Job Procedure Proof of Review

Safe	Development			Revised			Reviewed		
Work	Date		By Whom	Date		By Whom	Date		By Whom
Procedure	M	Y		M	Y		M	Y	
1	03	05	Br. Mgrs.				01	19	JHSC
2	03	05	Br. Mgrs.				01	19	JHSC
3	03	05	Br. Mgrs.				01	19	JHSC
4	03	05	Br. Mgrs.				01	19	JHSC
5	03	05	Br. Mgrs.				01	19	JHSC
6	03	05	Br. Mgrs.				01	19	JHSC
7	03	05	Br. Mgrs.				01	19	JHSC
8	03	05	Br. Mgrs.				01	19	JHSC
9	01	14	T. Firth				01	19	JHSC
10	03	05	Br. Mgrs.				01	19	JHSC
11	03	05	Br. Mgrs.				01	19	JHSC
12	01	14	T. Firth				01	19	JHSC
13	01	14	T. Firth				01	19	JHSC
14	03	14	T. Firth				01	19	JHSC
15	01	14	T. Firth				01	19	JHSC
16	01	14	T. Firth				01	19	JHSC
17	03	05	Br. Mgrs.				01	19	JHSC
18	01	14	T. Firth				01	19	JHSC
19	03	05	Br. Mgrs.				01	19	JHSC
20	03	05	Br. Mgrs.				01	19	JHSC
21	01	14	T. Firth				01	19	JHSC
22	01	14	T. Firth				01	19	JHSC
23	03	05	Br. Mgrs.				01	19	JHSC
24	01	14	T. Firth				01	19	JHSC
25	03	05	Br. Mgrs.				01	19	JHSC
26	03	05	Br. Mgrs.				01	19	JHSC
27	01	14	T. Firth				01	19	JHSC
28	01	14	T. Firth				01	19	JHSC
29	03	05	Br. Mgrs.				01	19	JHSC
30	03	05	Br. Mgrs.				01	19	JHSC
31	03	05	Br. Mgrs.				01	19	JHSC
32	03	05	Br. Mgrs.				01	19	JHSC
33	03	05	Br. Mgrs.				01	19	JHSC
34	01	14	T. Firth				01	19	JHSC
35	01	14	T. Firth				01	19	JHSC
36	01	14	T. Firth				01	19	JHSC
37	01	14	T. Firth				01	19	JHSC
38	01	14	T. Firth				01	19	JHSC
39	03	05	Br. Mgrs.				01	19	JHSC
40	03	05	Br. Mgrs.				01	19	JHSC
41	03	05	Br. Mgrs.				01	19	JHSC
42	03	05	Br. Mgrs.				01	19	JHSC
43	03	05	Br. Mgrs.				01	19	JHSC
44	03	05	Br. Mgrs.				01	19	JHSC
45	03	05	Br. Mgrs.				01	19	JHSC

4.3 Safe Job Procedure Proof of Review (con't)

Safe	Development			Revised			Reviewed		
Job	Date		By Whom	Date		By Whom	Date		By Whom
Procedure	M	Y		M	Y		M	Y	
46	03	05	Br. Mgrs.				01	19	JHSC
47	03	05	Br. Mgrs.				01	19	JHSC
48	03	05	Br. Mgrs.				01	19	JHSC
49	03	05	Br. Mgrs.				01	19	JHSC
50	03	05	Br. Mgrs.				01	19	JHSC
51	03	05	Br. Mgrs.				01	19	JHSC
52	01	14	T. Firth				01	19	JHSC
53	01	14	T. Firth				01	19	JHSC
54	07	14	T. Firth				01	19	JHSC
55	07	14	T. Firth				01	19	JHSC
56	12	14	T. Firth/D. Jones				01	19	JHSC
57	12	14	T. Firth/A. Allain				01	19	JHSC
58	12	14	T. Firth/D. Jones				01	19	JHSC
59	01	18	E.Joy				01	19	JHSC

118 Cocagne Cross Road
Cocagne, NB E4R 2J2
Tel.: (506) 576-6683 Fax: (506) 576-9714

COMPANY RULES

Section 5

Section 5

Company Rules

5.1 Disciplinary Policy……5.3

5.2 General Safety Rules……5.5

5.3 Disciplinary Action Record……5.7

F-05-1 Employee Warning Notice Form……5.8

5.4 Section 5 Proof of Review……5.9

118 Cocagne Cross Road
Cocagne, NB E4R 2J2
Tel.: (506) 576-6683 Fax: (506) 576-971

DISCIPLINARY POLICY

Section 5.1

Disciplinary Policy

Purpose

This policy is written to establish a consistent procedure for maintaining suitable behaviour and a productive working environment in the workplace. These procedures are a guideline and minor differences of the process as follows shall not affect the authority of any actions taken consistent to this policy.

Policy

Every Supervisor and/or Persons in charge of a workplace will make sure that everyone on the work site will comply with OHSA & Regulations. Upon breach of *Atlantic Roofers Limited/North Shore Roofing Ltd.'s* Policies, rules or OHSA & Regulations, the following disciplinary actions will be administered:

1st Instance	Verbal Warning
2nd Instance	Written Warning
3rd Instance	Suspension or Permanent Dismissal/Termination of Employment

All notices shall be explained to any employees, their supervisors, subcontractors, and union (through representative if applicable) regarding violations. Copies shall be distributed to all applicable parties and personnel records.

At any step in the process, an employee may be sent home without pay, pending investigation. Likewise, subcontractors or any person performing work for *Atlantic Roofers Limited/North Shore Roofing Ltd.* may be asked to discontinue work, without notice.

Individuals will be dismissed without prior notice if their actions are deemed to pose an immediate risk to themselves, co-workers and/or *Atlantic Roofers Limited/ North Shore Roofing Ltd.*

Responsibilities

Management

Management is responsible to uphold this policy at all times and to conduct necessary investigation when an incident arises. Management reserves the right to make the final call on all investigations, save those that are investigated by an external governing body.

Supervisors

Supervisors are to uphold the policies at all times and report any issues to management right away.

Employees

All Employees are to abide by company rules, procedures and policies at all times. Each employee is expected to know and understand rules, procedures and policies. Employees are expected to ask questions when something is not clear or is not understood.

****The policies and procedures contained within this Health and Safety program do not take precedence over any Occupational Health Safety and/or Environmental legislation in the jurisdiction in which the work is being carried out. All employees and contractors will familiarize themselves with all Provincial, Federal and/or State Occupational Health, Safety and Environmental Acts, Regulations, Policies and other legislative requirements prior to***

Yves Bradet, General Manager
Atlantic Roofers Limited

Jan 14/19
Date

Terry Casey, General Manager
North Shore Roofing Ltd.

Jan 14/19
Date

118 Cocagne Cross Road
Cocagne, NB E4R 2J2
Tel.: (506) 576-6683 Fax: (506) 576-971

GENERAL SAFETY RULES

Section 5.2

General Safety Rules

1. The use, possession or distribution of alcohol, illegal drugs, firearms and unauthorized explosives while on *Atlantic Roofers Limited/North Shore Roofing Ltd.* owned premises, rented premises, job sites, company owned vehicles, rented vehicles and personal vehicles while on company business is prohibited.

2. Employees who are taking over the counter or prescription medication that could affect their ability to perform their duties are to notify their supervisor in confidence.

3. Fighting, horseplay, practical jokes, or otherwise interfering with another worker, is prohibited.

4. Arriving for work or remaining at work when ability to perform work safely is impaired is prohibited.

5. Smoking is restricted to approved areas only.

6. The employees shall not use the compressed air to clean the dust off their clothing or their body.

7. Any accidents that involve the public are reported directly to the Safety Coordinator and General Manager.

8. Theft, vandalism or any other abuse or misuse of company property is prohibited.

9. All incidents that result in damage or injury, all unsafe acts and conditions, including a "near miss" incident, no matter how slight, are to be reported to your supervisor immediately.

10. Vehicle/equipment operators shall have a valid license and/or operating ticket when required.

11. First Aid treatment is to be obtained promptly, for any injury.

12. All work shall be conducted in accordance with appropriate safe work practices, job procedures and your supervisor's direction.

13. Every employee shall practice good housekeeping and keep his/her work area neat, clean and orderly.

14. Operate all vehicles and mobile equipment in accordance with site rules and highway regulations.

15. Running is not permitted, except in extreme emergency.

16. Jumping from equipment is prohibited.

17. Unauthorized riding on equipment, hoists, hooks, and other material is strictly prohibited.

18. Clothing shall be appropriate to the climatic conditions, and to the duties being performed. CSA approved personal protective equipment must be worn when required by regulation of the Occupational Health and Safety Act and as directed by the employer by all employees.

Yves Bradet, General Manager
Atlantic Roofers Limited

Jan 14/19
Date

Terry Casey, General Manager
North Shore Roofing Ltd.

Jan 14/19
Date

118 Cocagne Cross Road
Cocagne, NB E4R 2J2
Tel.: (506) 576-6683 Fax: (506) 576-971

DISCIPLINARY ACTION RECORD

Section 5.3

Atlantic Roofers Limited **North Shore Roofing Ltd** Occupational Health & Safety Program	Date Last Revision: *Jan 2018*	Document No. **(M)(S)(P)F-05-1**
	Title: **Employee Warning Notice**	**Page 1 o1**

Employee Information

Employee Name: _____ Date: _____

Employee ID: _____ Job Title: _____

Supervisor: _____ Department: _____

Type of Warning

☐ First Warning (Verbal) ☐ Second Warning (Written) ☐ Final Warning (Suspension or Permanent Dismissal/Termination)

Type of Offense

☐ Tardiness/Leaving Early ☐ Absenteeism ☐ Violation of Company Policies

☐ Substandard Work ☐ Violation of Safety Rules ☐ Rudeness to Customers/Coworkers

☐ Other: _____

Details

Description of Infraction:

Plan for Improvement:

Consequences of Further Infractions:

Acknowledgement of Receipt of Warning

By signing this form, you confirm that you understand the information in this warning. You also confirm that you and your foreman/manager have discussed the warning and a plan for improvement. Signing this form does not necessarily indicate that you agree with this warning.

Employee Signature	Date
Foreman Signature	Date
Witness Signature (if employee understands warning but refuses to sign)	Date

5.4 Section 5 Proof of Review

Section / Form	Development			Revised			Reviewed		
	Date		By Whom	Date		By Whom	Date		By Whom
	M	Y		M	Y		M	Y	
5.1	03	05	Br. Mgrs.				01	19	JHSC
5.2	03	05	Br. Mgrs.				01	19	JHSC
5.3	01	14	T. Firth				01	19	JHSC
F-05-1	01	14	T. Firth				01	19	JHSC

118 Cocagne Cross Road
Cocagne, NB E4R 2J2
Tel.: (506) 576-6683 Fax: (506) 576-9714

PERSONAL PROTECTIVE EQUIPMENT

Section 6

Section 6

Personal Protective Equipment

6.1 Personal Protective Equipment Policy……6.5

PPE Issue Agreement Form……6.6

6.2 Personal Protective Equipment (PPE) Info Sheets……6.7

Eye and Face Protection Info Sheet……6.8

Fall Protection Info Sheet……6.9

Foot Protection Info Sheet……6.10

Head Protection Info Sheet……6.11

Hearing Protection Info Sheet……6.12

Limb and Body Protection Info Sheet……6.13

Respiratory Protection Info Sheet……6.14

6.3 Specialized PPE Inspection Forms……6.15

Harness Inspection……6.16

Non-Retracting Lanyard Inspection……6.17

Self-Retracting Lanyard Inspection……6.18

Lifeline Inspection……6.19

Rope Gran Inspection……6.20

Rollgliss Rescue Kit Inspection……6.21

6.4 Section 6 Proof of Review……6.22

118 Cocagne Cross Road
Cocagne, NB E4R 2J2
Tel.: (506) 576-6683 Fax: (506) 576-9714

PERSONAL PROTECTIVE EQUIPMENT POLICY

Section 6.1

Personal Protective Equipment Policy

Purpose

Personal Protective Equipment (PPE) if used correctly will protect the worker from hazards they are exposed to on the worksite. Administration and engineering controls will be the primary methods used to control workers from injury and PPE will provide the additional degree of protection. All employees, contractors, suppliers and visitors must comply with the PPE policy, as required.

Policy

Personal Protective Equipment (PPE) is required by the Occupational Health and Safety Act and Regulations and must be considered a condition of employment and will be worn as required without exception.

It is the policy of *Atlantic Roofers Limited/North Shore Roofing Ltd* that all employees, visitors and guests use the following PPE while on our work sites:

1. CSA approved Hard Hat
2. CSA approved Safety Boots
3. Work-grade long trousers
4. A sleeved shirt (where appropriate for handling hot material or asphalt)
5. Any other specialty PPE such as hand protection, eye protection, hearing protection, respiratory protection, fall protection, UV protection, etc.

These requirements do not apply when inside offices, lunchrooms, or in the cab of an enclosed vehicle.

Atlantic Roofers Limited/North Shore Roofing employees must adhere to client fall protection requirements if they exceed the legislated standard. If a guardrail system is not available, a fall arrest or travel restraint system must be used.
The standard height at which fall protection is required in Canada is 10 ft (3 m). However, some clients follow the more stringent US OSHA standard. In the Construction Industry, employees must use fall protection on a walking or working surface with an unprotected side/edge which is 6 ft (1.8 m) or more above a lower level (OSHA 1926.501b). In General Industry, fall protection for wall openings and holes must be used at a height of 4 ft (1.2 m) (OSHA 1910.23b).

Responsibilities

Management

i. Ensure the PPE policy is complied with
ii. Provide all employees with the necessary training on PPE.
iii. Ensure the following inspection protocol is followed for Fall protection systems:
   - Each employee shall visually inspect each component of the fall protection system before use during a shift
   - All fall protection equipment shall be inspected by a competent person before the initial use and periodically as per manufacturers, installer, or engineer recommendation or as ordered by an enforcement officer.

Supervisor

i. Ensure the appropriate PPE is available for employees who require it.
ii. Ensure PPE is maintained in accordance with CSA standards and manufacturer's instructions.
iii. Ensure appropriate PPE is determined through the hazard assessment.
iv. Provide all employees with the necessary training on PPE.
v. Maintain appropriate training, inspection and maintenance logs for specialty PPE (i.e. fall arrest harnesses).

Workers

i. Use, maintain, and clean according to CSA standards.
ii. All PPE will be used within the requirements of the Occupational Health and Safety Act and CSA standards.
iii. The employee using the PPE will inspect PPE at time of issue and before each use during the shift.
iv. All PPE that is of questionable reliability, damaged, or in need of service or repair will be removed from service immediately.

Visitors

i. All visitors are responsible for complying with the site PPE requirements.

PPE Training

Before doing work requiring use of PPE, employees must be trained to know when PPE is necessary, what type is necessary, how it is worn, what its limitations are, and the proper care, maintenance, useful life, and proper disposal of PPE.

A record of this training shall be kept in the employee's personnel file. The training record shall include the name of the employees trained, the date(s) of training, and identify the PPE trained on.

****The policies and procedures contained within this Health and Safety program do not take precedence over any Occupational Health Safety and/or Environmental legislation in the jurisdiction in which the work is being carried out. All employees and contractors will familiarize themselves with all Provincial, Federal and/or State Occupational Health, Safety and Environmental Acts, Regulations, Policies and other legislative requirements prior to commencing work on any site or project.***

Yves Bradet, General Manager
Atlantic Roofers Limited

Jan 14/19
Date

Terry Casey, General Manager
North Shore Roofing Ltd.

Jan 14/19
Date

Atlantic Roofers Limited North Shore Roofing Ltd Occupational Health & Safety Program	Date Last Revision: *Sept. 2014*	Document No. **S-06-7**
	Title: **PPE Issue Agreement**	**Page 1 of 1**

Branch Location: _____

You have been assigned Atlantic Group of Companies (Atlantic Roofers Limited, North Shore Roofing Ltd, Atlantic Metaclad), owned equipment (listed below) to complete your job duties and, accordingly, you are temporarily assuming responsibility for the item(s).

The Company is deeply concerned with safety in the workplace. If you are unsure of the proper and safe way to use any piece of equipment, you must contact your supervisor immediately. You should never use any piece of equipment in a way that you know or suspect may be unsafe. Likewise, you should immediately report any problems or damage to, or resulting from, an Atlantic Group of Companies piece of equipment as well as any theft of the equipment.

You should take reasonable precautions to protect the equipment and comply with any applicable Atlantic Group of Companies policy regarding use of the equipment. You also shall not use Company equipment for non-work related tasks, or allow non-employees to use the equipment. When the task has been completed for which the equipment was needs, you must promptly return it.

Failure to return or properly account (by, for instance, explaining reasonable precautions that were taken) for equipment belonging to the Company will result in, among other things, deductions from your pay. All equipment being returned must pass inspection and substitutions will not be accepted.

Specifically, the value of the equipment will be deducted from your next paycheck after you have been requested to return your equipment. If your employment with Atlantic Group of Companies ends before the cost of the equipment has been recovered from your pay, the remaining (or, if applicable, the entire) values of the equipment will be deducted from any accrued vacation or other paid benefits, that are typically paid out upon separation of employment. Atlantic Group of Companies may also pursue other legal and criminal remedies if warranted.

I, _____ (print name) acknowledge the forging terms of using Atlantic Group of companies owned equipment and agree to abide by its terms.

_____ _____

Date Employee Signature (Required)

_____ _____

Date Manager/Safety Coordinator Signature (Required)

Product	Manufacturer	Product Details		
Harness		Serial #		
Lanyard		Serial #	Length	Wire Web
Rope Grab		Serial #		
Lifeline Rope		Serial #	Length	
Hard Hat		Colour		
Safety Vest		Size		
Safety Glasses		50/50	Tinted	
Knee Pads				
Gloves		Size		
SRL		Serial #		

118 Cocagne Cross Road
Cocagne, NB E4R 2J2
Tel.: (506) 576-6683 Fax: (506) 576-9714

PERSONAL PROTECTIVE EQUIPMENT (PPE)

"INFO SHEETS"

Section 6.2

Eye and Face Protection Info Sheet

General Information

This PPE is designed to protect the worker from such hazards and is mandatory where there is a risk of:

- flying objects and particles,
- molten metals,
- splashing liquids, and
- Ultraviolet, infrared and visible radiation (welding).

This PPE has two types. The first type, "basic eye protection", includes:

- eyecup goggles, and
- Mono-frame goggles and spectacles with or without side shields.

The second type, "face protection", includes:

- metal mesh face shields or radiant heat of hot and humid conditions,
- chemical and impact resistant (plastic) face shields,
- welders shields or helmets with specified cover, and
- filter plates and lens

Hardened glass prescription lens and sport glasses are not an acceptable substitute for proper, required industrial safety eye protection.

Comfort and fit are very important in the selection of safety eyewear. Lens coatings, venting or fittings may be needed to prevent fogging or to fit with regular prescription eyeglasses.

Contact lens should **NOT** be worn at the work-site. Contact lenses may trap or absorb particles or gases causing eye irritation or blindness. Hard contact lenses may break into the eye when hit.

Basic eye protection should be worn with face shields. **Face shields** alone often aren't enough to fully protect the eye from work hazards. When eye and face protection are required, advice from the WHSCC office, Material Data Safety Sheet (MSDS) or your supplier will help in your selection.

For more information, refer to:

- Provincial, Federal and/or State Occupation Health and Safety Act, Regulations and Code of Practices

Do

- ✓ Ensure your eye protection fits properly (close to face)
- ✓ Clean safety glasses daily, more often if needed
- ✓ Store safety glasses in a safe, clean, dry place when not in use
- ✓ Replace pitted, scratched, bent and poorly fitted PPE (damaged face/eye protection interferes with vision and will not provide the protection it was designed to deliver).

Don't

- X Modify eye/face protection
- X Use eye/face protection that does not have a CSA certification (CSA stamp for safety glasses is usually on the frame inside the temple near the hinges of the glasses).
- X Wear contact lenses at the worksite, contact lenses may trap or absorb particles or gases causing eye irritation or blindness. Hard contacts may break into the eye when hit.

These guidelines are not intended to conflict with or supersede the Provincial Occupational Health and Safety Act or Regulations made pursuant to the Act. Reference to such specific provisions should be made by the user.

Fall Protection Info Sheet

General Information

Body harnesses can be used for travel restrict systems but must be used for fall arrest systems. The harness is worn around the body and usually used in conjunction with a lanyard, rope grab and life line. While a shock absorber is required if the worker can free fall over 4 feet (to reduce the shock level of any fall), it is required that a shock absorber be used in any fall arrest system. All fall protection systems components must be CSA Approved.

A lifeline should never be used as a service line. The only time a lifeline becomes a load bearing line is in the event of a fall. At all other times it should be just slack enough to permit free movement around any service lines.

Usage

A Fall Protection System means a guardrail, a travel restraint system, a fall arresting system, a fall restricting system, that is either a personal fall restricting system or a collective fall restricting system that was designed to:

- Prevent or eliminate the risk of falling
- Restrain an employee who is at risk of falling
- Stop an employee who has fallen

Fall protection is required when working from an unguarded work area that is:

- 10 feet (3 meters) or more above water or the nearest permanent safe level
- Above a surface or object that could cause injury upon contact, or
- Above any open top tank, bin, hopper or vat.
- At locations or during activities as identified by *Atlantic Roofers Limited/North Shore Roofing Ltd.* management.

**Formal Training in fall protection is required every 3 years (at minimum).

Do

- ✓ Obtain expert advice before purchasing a fall arresting device
- ✓ Properly train and practice with the system you decide to use to ensure competency
- ✓ Use webbing type harnesses instead of leather harnesses
- ✓ Inspect all components of the fall protection system carefully before each use (inspection by a competent worker)
- ✓ Have the harness fitted snugly to the worker
- ✓ Ensure that the anchor points are secure to support the load in the event of a fall
- ✓ Follow the manufacturer's instruction on inspection , care and use
- ✓ Ensure all lines used with the systems have thimbles
- ✓ Use only the proper safety rated fastenings with the system
- ✓ Use a full body harness with shock absorber

Don't

- X Modify, change or put additional holes in the harness or hardware
- X Jerry-rig the system
- X Use the system for any other than its intended use
- X Use the lifeline for a service line.

These guidelines are not intended to conflict with or supersede the Provincial Occupational Health and Safety Act or Regulations made pursuant to the Act. Reference to such specific provisions should be made by the user.

Foot Protection Info Sheet

General Information

Safety footwear is designed to protect against foot hazards in the workplace. Safety footwear protects against compression, puncture injuries, and impact. The use of foot protection is mandatory.

Safety footwear is divided into three grades that are indicated by colored tags and symbols.

The **tag color** tells the amount of resistance the toe will supply to different weights dropped from different heights.

The **symbol** indicates the strength of the sole. For example, a triangle means puncture-resistant sole able to withstand 135 kg (300 ftlbs) of pressure without being punctured by a 5 cm (2 inch) nail; for more information, OSGR Part 3 12(1).

In construction, it is recommended that only the green triangle grade of footwear, which also gives ankle support, be used.

Your choice of protective footwear should always over protect, not under protect.

Do

- ✓ Choose footwear according to job hazard and CSA Standards
- ✓ Lace up boot and tie laces securely; boots don't protect if they are a tripping hazard or fall off
- ✓ Use protective boot dressing to help the boot last longer and to provide greater water resistance. (wet boots conduct current)
- ✓ Choose a high cut boot to provide ankle support (less injuries)

Don't

- X Wear defective safety footwear (i.e., exposed steel toe caps)
- X Under protect your feet or modify safety footwear

These guidelines are not intended to conflict with or supersede the Provincial Occupational Health and Safety Act or Regulations made pursuant to the Act. Reference to such specific provisions should be made by the user.

Head Protection Info Sheet

General Information

Safety headwear is designed to protect the head from impact from falling objects, bumps, splashes from chemicals or harmful substances, and contact with energized objects and equipment. The use if head protection is mandatory.

In construction, only CSA approved hard hats are acceptable. There are many designs but they must all meet the CSA requirements for industrial head protection.

Most head protection is made up of two parts:

- The shell (light and rigid to deflect blows)
- The suspension (to absorb and distribute the energy of the blow)

Both parts of the headwear must be compatible and maintained according to manufacturer's instructions. If attachments are used with headgear, the must be designed specifically for use with the specific headwear used. Bump caps are not considered a helmet.

Inspection and Maintenance

Proper care is required for headgear to perform efficiently. The service life is affected by many factors including temperature, chemicals, sunlight and ultraviolet radiation (welding). The usual maintenance for headgear is simply washing with a mild detergent and rinsing thoroughly.

Do

- ✓ Replace headgear that is pitted, holed, cracked or brittle
- ✓ Replace headgear that has been subjected to a blow even though damage cannot be seen
- ✓ Remove from service any headgear if its serviceability is in doubt
- ✓ Replace headgear and components according to manufacturer's instructions
- ✓ Use liners that are only specified for brand of hardhat

Don't

- X Drill, remove peaks, and alter the shell or suspension in any way
- X Use solvents or paints on the shells (makes shells "break down")
- X Put chin straps over the brims of headgear
- X Use any liner that contains metal or conductive material
- X Carry anything in the hard hat while wearing the hard hat
- X Wear your hardhat incorrectly – backwards - sideways

These guidelines are not intended to conflict with or supersede the Provincial Occupational Health and Safety Act or Regulations made pursuant to the Act. Reference to such specific provisions should be made by the user.

Hearing Protection Info Sheet

General Information

Hearing protection is designed to reduce the level of sound energy reaching the inner ear and is mandatory in designated areas.

> **The "rule of thumb" for hearing protection is: use hearing protection when you can't carry on a conversation at a normal volume of voice when you are three feet apart.**

Remember, this is only one rule of thumb. Any sustained sound over 80 dba requires hearing protection. Hearing loss can be very gradual, usually happening over a number of years.

The most common types of hearing protection in the construction industry are **earplugs** and **earmuffs**. If you choose to use the other types of hearing protection, ask your safety supplier or Department of Labour office for further information.

It is important to have different styles of hearing protection available. Different styles allow a better chance of a good fit. Each person's head, ear shape and size is different. One style may not fit every person on your crew. If hearing PPE does not fit properly or is painful to use, the person will likely not use it. If hearing protection is not properly fitted, it will not supply the level of protection it was designed to deliver.

Most earplugs, if properly fitted, generally reduce noise to the point where it is comfortable (takes the sharp edge off the noise).

> **If your hearing protection does not take the sharp edge off the noise, or if your workers have ringing, pain, headaches or discomfort in the ears, your operation requires the advice of an expert.**

Workers should have their hearing tested at least every year, twice a year if they work in a high noise area.

Hearing Protection is required to be worn in the following manner:

Less than 80dB(A)	- No protection required
80dB(A) - 104dB(A)	- Class A protection - either muff or plug
105dB(A) - 110dB(A)	- Class A muff or plug with a reduction rating sufficient to reduce the dBA's
More than 110dB(A)	- Class A muff or plug with a reduction rating sufficient to reduce the dBA's

For more information, refer to:

- CSA Standard Hearing Protectors Z94.2 M1984

These guidelines are not intended to conflict with or supersede the Provincial Occupational Health and Safety Act or Regulations made pursuant to the Act. Reference to such specific provisions should be made by the user.

Limb and Body Protection Info Sheet

General Information

Due to the nature of the construction workplace and the number of different hazards, it is not possible to cover specialized limb and body protection in detail. These types of hazards are known as "job exposures" (exposure to fire, temperature extremes, body impacts, corrosives, molten metals, cuts from sharp or abrasive materials). PPE in the category would be items such as:

- Leg, arm, chin and belly guards
- Specialty hand pads and grips
- Leather aprons and leggings
- Full body suits
- Flame and chemical resistant clothing
- Various types of plastic boot covers, and oversize shoes

With all PPE, following the manufacturer's instructions on its use, care and cleaning is critical and will help you get the full service life from your specialty PPE.

Hand PPE (Gloves and Mitts)

PPE for the hands include: finger guards, thimbles and cots, hand pads, mitts, gloves, and barrier creams. Choose hand PPE that will protect against chemicals, scrapes, abrasions, heat and cold, punctures and electrical shocks.

Types

PPE for the hands come in many forms, each designed to protect against certain hazards. Gloves most commonly used in the construction industry are made from leather, cotton, rubber, synthetic rubbers and other man-made materials, or combinations of materials.

Vinyl coated or leather gloves are good for providing protection while handling wood or metal objects. When you select hand PPE, keep the following in mind: look for anything at the job-site that may be hazardous to your hands. If gloves are to be used, select the proper type for the job to be done. Inspect and maintain hand PPE regularly. If in doubt about the selection or need for glove or hand PPE, consult your safety supplier or Material Safety Data Sheet (MSDS).

Usage

- At locations or during activities as identified by *Atlantic Roofers Limited / North Shore Roofing Ltd.*
- Leg protection must be worn while using a chain saw and must be cut resistant and CSA approved.

Do

- ✓ Inspect hand PPE for defects before use
- ✓ Wash all chemicals and fluids off gloves before removing them
- ✓ Ensure gloves fit properly
- ✓ Follow manufacturer's instructions on the care and use of the hand PPE you are using
- ✓ Ensure exposed skin is covered (no gap between the sleeve and the hand PPE)

Don't

- X Wear gloves when working with moving machinery (gloves can get tangled or caught)
- X Wear hand PPE with metal parts near electrical equipment
- X Use gloves or hand protection that is worn out or defective
- X Wear rings or loose dangling jewelry

These guidelines are not intended to conflict with or supersede the Provincial Occupational Health and Safety Act or Regulations made pursuant to the Act. Reference to such specific provisions should be made by the user.

Respiratory Protection Info Sheet

General Information

Respiratory protection falls into two major categories. The first is Air Purifying Respirators (APRs) that are particle (dust) chemical cartridge, but NO visor plate. The second category is Atmosphere Supply Respirators, including self-contained breathing apparatus (SCBA), airline systems and protective suits that completely enclose the worker and incorporate a life support system.

Only APRs will be dealt with here. The second category of respirators requires much more specific information and training. If you need to use Atmosphere Supplying Respirators, you should get expert advice.

APRs

There are two basic types of APRs:

- disposable fibre type with or without charcoal or chemical filter "buttons" and
- the reusable rubber face mask type with disposable or rechargeable cartridges

The choice depends on your job, labour, cost, and your maintenance facility.

It is important to remember that APRs are limited to areas where there is enough oxygen to support life. APRs don't make or supply oxygen.

The type of APR, wearer breathing demand, and the concentration of airborne containments affect the service life. When an APR is required, consult the Material Safety Data Sheets (MSDS) or supplier for the exact specifications for the APR.

Facial hair can prevent a good seal and fit of an APR: One to three day's growth is the worst. Follow the manufacturer's instructions to the letter regarding the mask, filters, cartridges and other components. Workers that must use respiratory protection should be clean-shaven.

An APR is only as good as its seal and its ability to filter out the contaminants it was designed to filter.

Combination Respirators

This type of APR combines separate chemical and mechanical filters. This allows the change of the different filters when one of them becomes plugged or exhausted before the other filter (usually the dust filter plugs up before the chemical filter). **This type of respirator is suitable for most spray painting and welding.**

For more information check the:

- Material Safety Data Sheets (MSDS),
- Local WHSCC, or
- Safety equipment supplier

Do

- Train workers very carefully in the APR's use, care and limitations
- Ensure that respirators are properly cleaned and disinfected after each shift, according the manufacturer's instructions
- Dispose of exhausted cartridges and masks in sealed bags or containers
- Keep new, unused filters separate from old, used filters
- Monitor APR use; they are useless just hung around the neck
- Replace filters when breathing becomes difficult

Don't

- Use for protection against materials which are toxic in small amounts
- Use materials that are highly irritating to the eyes
- Use with gases that can't be detected by odor or throat irritation
- Use with gases not effectively halted by chemical cartridges regardless of concentration (read the cartridge label)
- Use respirators or masks if the serviceability is in doubt
- Us APRs where oxygen content in the air is less that 18% or 18 kilopascals (partial pressure or greater)

These guidelines are not intended to conflict with or supersede the Provincial Occupational Health and Safety Act or Regulations made pursuant to the Act. Reference to such specific provisions should be made by the user.

118 Cocagne Cross Road
Cocagne, NB E4R 2J2
Tel.: (506) 576-6683 Fax: (506) 576-9714

SPECIALIZED PPE INSPECTION FORMS

Section 6.3

Atlantic Roofers Limited North Shore Roofing Ltd Occupational Health & Safety Program	Date Last Revision: *Jan 2018*	Document No. **S-06-1**
	Title: **Harness Inspection**	**Page 1 of 1**

PASSED ☐ **Date Inspected:** _____ / _____ / _____
FAILED ☐ dd mm yyyy

User's Name: _____ **Inspected By:** _____

Manufacturer: _____ **Serial/Model Num:** _____

1. WEBBING	2. BUCKLES	3. STITCHING
☐ Damage due to Chemicals	☐ Cracked	☐ Broken
☐ Damage due to Heat	☐ Corroded	☐ Burnt
☐ Damage due to UV	☐ Damaged	☐ Cut
☐ Discoloration	☐ Distorted	☐ Frayed
☐ Fibers Broken	☐ Poor Function	☐ Missing
☐ Fibers Cut	☐ Sharp Edges	☐ Pulled
☐ Fibers Fraying	☐ Welded	☐ Other _____
☐ Requires Cleaning	☐ Worn Parts	_____
☐ Other_____	☐ Other _____	
_____	_____	
☐ Pass ☐ Fail	☐ Pass ☐ Fail	☐ Pass ☐ Fail

4. GROMMETS	5. "D" RING	6. RIVETS
☐ Not Applicable	☐ Bent	☐ Not Applicable
☐ Bent	☐ Cracked	☐ Bent
☐ Chemical Corrosion	☐ Damaged	☐ Corroded
☐ Loose	☐ Distorted	☐ Loose
☐ Missing	☐ Sharp Edges	☐ Missing
☐ Other _____	☐ Welded	☐ Other _____
_____	☐ Other _____	_____
	_____	
☐ Pass ☐ Fail	☐ Pass ☐ Fail	☐ Pass ☐ Fail

7. LABELS	8. PLASTIC "D" SHIM	9. KEEPERS
☐ Missing	☐ Missing	☐ Missing
☐ Not Legible	☐ Poor Condition	☐ Poor Condition
☐ Pass ☐ Fail	☐ Pass ☐ Fail	☐ Pass ☐ Fail

Note: If one or more items have been checked in boxes 1 to 9, the harness must be removed from service.

Note: If the harness has been modified/altered in any way, it must be removed from service.

Removed From Service ☐ **Yes** ☐ **No** **Date:** _____ / _____ / _____
dd mm yyyy

Atlantic Roofers Limited North Shore Roofing Ltd Occupational Health & Safety Program	Date Last Revision: *Jan 2018*	Document No. **S-06-2**
	Title: **Non Retracting Lanyard Inspection**	**Page 1 of 1**

PASSED ☐ **Date Inspected:** _____ / _____ / _____

FAILED ☐ **dd** **mm** **yyyy**

User's Name: _____ **Inspected By:** _____

Manufacturer: _____ **Serial/Model Num:** _____

1. WEBBING	2. CONNECTING ELEMENTS	3. STITCHING
☐ Damage due to Chemicals	☐ Cracked	☐ Broken
☐ Damage due to Heat	☐ Corroded	☐ Burnt
☐ Damage due to UV	☐ Damaged	☐ Cut
☐ Discoloration	☐ Distorted	☐ Frayed
☐ Fibers Broken	☐ Poor Function	☐ Missing
☐ Fibers Cut	☐ Sharp Edges	☐ Pulled
☐ Fibers Fraying	☐ Welded	☐ Other _____
☐ Requires Cleaning	☐ Worn Parts	_____
☐ Other_____	☐ Other _____	
_____	_____	
☐ Pass ☐ Fail	☐ Pass ☐ Fail	☐ Pass ☐ Fail

4. ROPE	5. WIRE ROPE	6. SHOCK ABSORBING PACK
☐ Fuzzy	☐ Broken Strands	☐ Outer Portion Intact
☐ Broken Fibers	☐ Cuts	☐ Burns
☐ Cut Fibers	☐ Frayed	☐ Tears
☐ Burns	☐ Unusual Wearing Pattern	☐ Loose stitching
☐ Other _____	☐ Plastic Sheathing Intact	☐ Deteriorated Stitching
_____	☐ Other _____	☐ Warning Flag Deployed
	_____	☐ Other _____
		_____
☐ Pass ☐ Fail	☐ Pass ☐ Fail	☐ Pass ☐ Fail

7. LABELS		
☐ Missing		
☐ Not Legible		
☐ Pass ☐ Fail		

Note: If one or more items have been checked in boxes 1 to 7, the lanyard must be removed from service.

Note: If the lanyard has been modified/altered in any way, it must be removed from service.

Removed From Service ☐ **Yes** ☐ **No** **Date:** _____ / _____ / _____

dd **mm** **yyyy**

Atlantic Roofers Limited North Shore Roofing Ltd Occupational Health & Safety Program	Date Last Revision: *Jan 2018*	Document No. **S-06-3**
	Title: **Self Retracting Lanyard Inspection**	**Page 1 of 1**

PASSED ☐ **Date Inspected:** _____ / _____ / _____
FAILED ☐ **dd** **mm** **yyyy**

User's Name: _____ **Inspected By:** _____

Manufacturer: _____ **Serial/Model Num:** _____

1. HOUSING	2. WEBBING LIFELINE	3. WIRE ROPE LIFELINE
☐ Loose Fasteners	☐ Does Not Pull out freely	☐ Cuts/Frayed Areas
☐ Bent Housing	☐ Does Not Retract completely	☐ Worn/Broken Strands/Fibers
☐ Cracked Housing	☐ Cuts/Nicks/Tears	☐ Excessive Outside wear
☐ Distorted Housing	☐ Burns	☐ Modifications
☐ Worn Parts	☐ Corrosion	☐ Rust/Pitting/Corrosion
☐ Damaged Housing	☐ Kinks	☐ Crushed Strands
☐ Deformation	☐ Frays	☐ Bulges in Rope
☐ Corrosion	☐ Loose Stitching	☐ Heat Damage
☐ Modifications	☐ Broken Stitching	☐ Kinks/Bird-caging
☐ Other _____	☐ Other _____	☐ Core Protrusion
_____	_____	☐ Other_____
☐ Pass ☐ Fail	☐ Pass ☐ Fail	☐ Pass ☐ Fail

4. BRAKING MECHANISM	5. ANCHORAGE CONNECTION	6. SNAP HOOKS
☐ Slippage of Brake	☐ Carabiner Not Properly Seated	☐ Does Not Operate freely
☐ Does not Disengage	☐ Bent	☐ Does Not Lock
☐ Load Impact Indicator Activated	☐ Distorted	☐ Does Not Swivel
☐ Other _____	☐ Does Not Close	☐ Bends/Twists/Elongation
_____	☐ Cracked	☐ Cracked
	☐ Other _____	☐ Rust/Pitting/Corrosion
	_____	☐ Excessive Wear
		☐ Other _____
☐ Pass ☐ Fail	☐ Pass ☐ Fail	☐ Pass ☐ Fail

7. LABELS		
☐ Missing		
☐ Not Legible		
☐ Pass ☐ Fail		

Note: If one or more items have been checked in boxes 1 to 7, the lanyard must be removed from service.

Note: If the lanyard has been modified/altered in any way, it must be removed from service.

Removed From Service ☐ **Yes** ☐ **No** **Date:** _____ / _____ / _____
dd **mm** **yyyy**

Atlantic Roofers Limited North Shore Roofing Ltd Occupational Health & Safety Program	Date Last Revision: *Jan 2018*	Document No. **S-06-4**
	Title: **Lifeline Inspection**	**Page 1 of 1**

PASSED ☐ **Date Inspected:** _____ / _____ / _____
FAILED ☐ dd mm yyyy
User's Name: _____ **Inspected By:** _____
Manufacturer: _____ **Serial/Model Num:** _____

1. TWISTED ROPE	2. BRAIDED ROPE	3. POLYSTEEL ROPE
☐ Fiber Cuts/Nicks	☐ Pulled Cover Strands	☐ Fiber Cuts/Nicks
☐ Broken Fibers	☐ Core Visible	☐ Broken Fibers
☐ Fuzzy or Worn Fibers	☐ Core pulled out/cut/melted	☐ Fuzzy or Worn Fibers
☐ Overall Deterioration	☐ Cover cut or nicked	☐ Modifications
☐ Modifications	☐ Cover – Broken Fibers	☐ Fraying/Abrasions
☐ Fraying/Abrasions	☐ Knots/Kinks	☐ Hard or Shiny Spots
☐ Hard or Shiny Spots	☐ Modifications	☐ Fused Fibers or Strands
☐ Fused Fibers or Strands	☐ Fraying/Abrasions	☐ Change in Original Diameter
☐ Change in Original Diameter	☐ Hard or Shiny Spots	☐ Burnt/Charred/Melted Fibers
☐ Burnt/Charred/Melted Fibers	☐ Fused Fibers or Strands	☐ Kinks/*Hockling/Knots
☐ Kinks/*Hockling/Knots	☐ Change in Original Diameter	☐ Discoloration/Brittle Fibers
☐ Other _____	☐ Burnt/Charred/Melted Fibers	☐ Other _____
_____	☐ Other _____	_____
☐ Pass ☐ Fail	☐ Pass ☐ Fail	☐ Pass ☐ Fail

4. SNAP HOOKS	5. THIMBLES / EYES / SPLICES	6. WIRE ROPE
☐ Not Self Locking	☐ Missing Thimble	☐ Cuts/Frayed areas
☐ Distortion	☐ Loose Thimble	☐ Worn/Broken Strands/Wires
☐ Latch Binding	☐ Damage-White stress Marks/Collapsing	☐ Excessive Outside Wear
☐ Modifications	☐ Rust Around Eye	☐ Modifications
☐ Rust/Pitting/Corrosion	☐ Cuts/Nicks/Abrasions to Eye	☐ Rust/Pitting/Corrosion
☐ Cracks	☐ Fraying/Fused Areas to Eye	☐ Crushed/Flattened Strands
☐ Rough/Sharp Edges	☐ Splice Unraveling/Deterioration	☐ Bulges in Rope
☐ Other _____	☐ Other _____	☐ Heat Damage
☐ Pass ☐ Fail	☐ Pass ☐ Fail	☐ Kinks/Bird-caging
7. LABELS		☐ Core Protrusion
☐ Missing		☐ Overall Deterioration
☐ Not Legible		☐ Other _____
☐ Pass ☐ Fail		☐ Pass ☐ Fail

Note: If one or more items have been checked in boxes 1 to 7, the lifeline must be removed from service.
Note: If the lifeline has been modified/altered in any way, it must be removed from service.

Removed From Service ☐ **Yes** ☐ **No** **Date:** _____ / _____ / _____
dd mm yyyy

Atlantic Roofers Limited North Shore Roofing Ltd Occupational Health & Safety Program	Date Last Revision: *Jan 2018*	Document No. **S-06-5**
	Title: **Rope Grab Inspection**	**Page 1 of 1**

PASSED ☐ **Date Inspected:** _____ / _____ / _____
FAILED ☐ **dd** **mm** **yyyy**

User's Name: _____ **Inspected By:** _____

Manufacturer: _____ **Serial/Model Num:** _____

1. INTERIOR MECHANISM	2. RIVETS	3. LOCKING LEVER
☐ Debris in Locking Cam	☐ Missing	☐ Failure to Close
☐ Broken Spring	☐ Broken	☐ Damaged Return Spring
☐ Trapped Debris	☐ Rust/Corrosion	☐ Trapped Debris
☐ Rust/Corrosion	☐ Modifications	☐ Broken
☐ Sharp edges	☐ Other _____	☐ Cracked
☐ Cracked	_____	☐ Distorted
☐ Distorted		☐ Modifications
☐ Modifications		☐ Other _____
☐ Other _____		_____
_____		
☐ Pass ☐ Fail	☐ Pass ☐ Fail	☐ Pass ☐ Fail
4. ATTACHMENT RING	**5. MARKINGS**	
☐ Damaged/Broken	☐ "UP" Arrow Missing	
☐ Cracked	☐ Diameter not Legible	
☐ Distorted	☐ Serial # not Legible	
☐ Rust/Corrosion	☐ Date of Manufacture not Legible	
☐ Sharp Edges	☐ CSA Stamp not Legible	
☐ Modifications	☐ Other _____	
☐ Other _____	_____	
_____		
☐ Pass ☐ Fail	☐ Pass ☐ Fail	☐ Pass ☐ Fail

Note: If one or more items have been checked in boxes 1 to 5, the rope grab must be removed from service.

Note: If the rope grab has been modified/altered in any way, it must be removed from service.

Removed From Service ☐ **Yes** ☐ **No** **Date:** _____ / _____ / _____
dd **mm** **yyyy**

Atlantic Roofers Limited North Shore Roofing Ltd Occupational Health & Safety Program	Date Last Revision: *Jan 2018*	Document No. **S-06-6**
	Title: **Rollgliss Rescue Kit Inspection**	**Page 1 of 1**

PASSED ☐ **Date Inspected:** _____ / _____ / _____
FAILED ☐ dd mm yyyy

User's Name: _____ **Inspected By:** _____

Manufacturer: _____ **Serial/Model Num:** _____

1. TWISTED ROPE	2. BRAIDED ROPE	3. POLYSTEEL ROPE
☐ Fiber Cuts/Nicks	☐ Pulled Cover Strands	☐ Fiber Cuts/Nicks
☐ Broken Fibers	☐ Core Visible	☐ Broken Fibers
☐ Fuzzy or Worn Fibers	☐ Core pulled out/cut/melted	☐ Fuzzy or Worn Fibers
☐ Overall Deterioration	☐ Cover cut or nicked	☐ Modifications
☐ Modifications	☐ Cover – Broken Fibers	☐ Fraying/Abrasions
☐ Fraying/Abrasions	☐ Knots/Kinks	☐ Hard or Shiny Spots
☐ Hard or Shiny Spots	☐ Modifications	☐ Fused Fibers or Strands
☐ Fused Fibers or Strands	☐ Fraying/Abrasions	☐ Change in Original Diameter
☐ Change in Original Diameter	☐ Hard or Shiny Spots	☐ Burnt/Charred/Melted Fibers
☐ Burnt/Charred/Melted Fibers	☐ Fused Fibers or Strands	☐ Kinks/*Hockling/Knots
☐ Kinks/*Hockling/Knots	☐ Change in Original Diameter	☐ Discoloration/Brittle Fibers
☐ Other _____	☐ Burnt/Charred/Melted Fibers	☐ Other _____
_____	☐ Other _____	_____
☐ Pass ☐ Fail	☐ Pass ☐ Fail	☐ Pass ☐ Fail

4. SNAP HOOKS	5. THIMBLES / EYES / SPLICES	6. WIRE ROPE
☐ Not Self Locking	☐ Missing Thimble	☐ Cuts/Frayed areas
☐ Distortion	☐ Loose Thimble	☐ Worn/Broken Strands/Wires
☐ Latch Binding	☐ Damage-White stress Marks/Collapsing	☐ Excessive Outside Wear
☐ Modifications	☐ Rust Around Eye	☐ Modifications
☐ Rust/Pitting/Corrosion	☐ Cuts/Nicks/Abrasions to Eye	☐ Rust/Pitting/Corrosion
☐ Cracks	☐ Fraying/Fused Areas to Eye	☐ Crushed/Flattened Strands
☐ Rough/Sharp Edges	☐ Splice Unraveling/Deterioration	☐ Bulges in Rope
☐ Other _____	☐ Other _____	☐ Heat Damage
☐ Pass ☐ Fail	☐ Pass ☐ Fail	☐ Kinks/Bird-caging
7. LABELS		☐ Core Protrusion
☐ Missing		☐ Overall Deterioration
☐ Not Legible		☐ Other _____
☐ Pass ☐ Fail		☐ Pass ☐ Fail

Note: If one or more items have been checked in boxes 1 to 7, the lifeline must be removed from service.

Note: If the lifeline has been modified/altered in any way, it must be removed from service.

Removed From Service ☐ **Yes** ☐ **No** **Date:** _____ / _____ / _____
dd mm yyyy

6.4 Section 6 Proof of Review

Section / Form	Development			Revised			Reviewed		
	Date		By Whom	Date		By Whom	Date		By Whom
	M	Y		M	Y		M	Y	
6.1	03	05	Br. Mgrs				01	19	JHSC
6.2	03	05	Br. Mgrs				01	19	JHSC
6.2.1	03	05	Br. Mgrs.				01	19	JHSC
6.2.2	03	05	Br. Mgrs.				01	19	JHSC
6.2.3	03	05	Br. Mgrs				01	19	JHSC
6.2.4	03	05	Br. Mgrs				01	19	JHSC
6.2.5	03	05	Br. Mgrs				01	19	JHSC
6.2.6	03	05	Br. Mgrs				01	19	JHSC
6.2.7	03	05	Br. Mgrs				01	19	JHSC
6.3	01	14	T. Firth				01	19	JHSC
S-06-1	01	14	T. Firth				01	19	JHSC
S-06-2	01	14	T. Firth				01	19	JHSC
S-06-3	01	14	T. Firth				01	19	JHSC
S-06-4	01	14	T. Firth				01	19	JHSC
S-06-5	01	14	T. Firth				01	19	JHSC
S-06-6	01	14	T. Firth				01	19	JHSC

118 Cocagne Cross Road
Cocagne, NB E4R 2J2
Tel.: (506) 576-6683 Fax: (506) 576-971

MAINTENANCE

Section 7

Section 7

Maintenance

7.1 Maintenance Policy…….7.3

7.2 Record Keeping…….7.6

F-07-1 Aerial Lift Daily Inspection……..7.7

F-07-2 Fork Lift Daily Inspection…….7.8

F-07-3 General Roofing Equipment Daily Inspection…….7.9

F-07-5 General Hoist Daily Inspection……..7.10

F-07-4 Company Vehicle Incident Report……7.12

P-07-1 Tool/Vehicle/Equipment Maintenance……..7.14

S-07-1 Emergency Equipment Inspection……..7.15

Out of Service Tags…….7.16

7.3 Vehicle Maintenance Plan……7.17

7.4 Section 7 Proof of Review…….7.18

118 Cocagne Cross Road
Cocagne, NB E4R 2J2
Tel.: (506) 576-6683 Fax: (506) 576-971

MAINTENANCE POLICY

Section 7.1

Maintenance Policy

Purpose
Preventative Maintenance is required to ensure that equipment and tools are maintained in safe condition, as well as to reduce the maintenance cost of the same. It is the policy of Atlantic Roofers Limited/North Shore Roofing Ltd. that all tools and equipment shall be properly maintained so as to reduce the risk of injuries to our employees or damage to property. Qualified personnel according to established schedules would carry out preventative maintenance.

Policy
Atlantic Roofers Limited/North Shore Roofing Ltd. is committed to reducing the risk of injury to employees and damage to property. The preventative maintenance program will ensure that all tools and equipment are properly maintained by the following requirements:

Inventory
An inventory of all equipment requiring maintenance will be compiled and maintained by management.

Informal Daily Maintenance Checks
Supervisors and workers shall check tools prior to use and defective tools will be immediately taken out of service. No person shall remove or render ineffective a safeguard for a piece of equipment or tool unless the removal is necessary to enable the cleaning, maintenance, or repair of the equipment/tool. Where the person removes or renders ineffective a safeguard that person shall ensure the safeguard is replaced and is functioning properly before leaving the equipment/tool or that the equipment/tool is in a zero-energy state. Removal, tampering or otherwise making ineffective any equipment/tool safeguard is prohibited.

Daily Pre-Use Inspections
Operators of equipment/machinery (i.e. forklifts, kettles, hoists, cranes, etc.) will conduct pre-use inspections on a daily basis. Completed daily inspection forms are to be reviewed by the supervisor so that timely completion of identified work can be arranged.

Emergency Equipment
The routine inspection and testing of the emergency electrical supply, emergency lights, alarm system, voice communication system, exit lights, sprinkler systems, fire extinguishers, and fire doors is performed on an annual basis.

Housekeeping
Maintaining workshops and job sites in a neat manner reduces the risk of personal injury and mishaps. All employees will ensure an effort is made to keep workstations as organized and neat as practical in performing their job.

Records and Statistics
The maintenance of records and statistics in support of the maintenance program will be the overall responsibility of management.

Requirement to Remove Equipment from Service

Ona daily basis, all employees are responsible for ensuring their tools, equipment and machinery are in safe working order. A piece of equipment, machinery, or tool that is not in a safe working condition or is not serviceable must be removed from use and tagged "OUT of SERVICE". The piece of equipment, machinery, or tool will then be turned in for repair through the supervisor or to the maintenance facility. Once the equipment, machinery or tool is ready for production it will be returned with an "IN SERVICE" tag.

****The policies and procedures contained within this Health and Safety program do not take precedence over any Occupational Health Safety and/or Environmental legislation in the jurisdiction in which the work is being carried out. All employees and contractors will familiarize themselves with all Provincial, Federal and/or State Occupational Health, Safety and Environmental Acts, Regulations, Policies and other legislative requirements prior to commencing work on any site or project.***

Yves Bradet, General Manager
Atlantic Roofers Limited

Jan 14/19
Date

Terry Casey, General Manager
North Shore Roofing Ltd.

Jan 14/19
Date

118 Cocagne Cross Road
Cocagne, NB E4R 2J2
Tel.: (506) 576-6683 Fax: (506) 576-97

RECORD KEEPING

Section 7.2

DAILY MOBILE LIFT EQUIPMENT SAFETY INSPECTION CHECKLIST

Date: _____ **Time:** _____ **Branch:** _____ **Location:** _____

Operator #1: _____ **Operator #2:** _____ **Foreman/Supervisor:** _____
Does this equipment need to be removed from service? Yes____ No_____

KEY OFF Procedures:
Visual inspection of:
- ☐ Work area (terrain)/Overhead clearance
- ☐ Broken, Cracked or Loose Parts
- ☐ Hydraulic/Fuel lines
- ☐ Door/step/handrail
- ☐ Mirrors/wipers/Windows
- ☐ Forks
- ☐ Tires/Wheels/Differential
- ☐ Fluid Levels
- ☐ Check all Hoses/Belts
- ☐ Warning Decals/Capacity plate
- ☐ Guards/covers/ Fire extinguisher
- ☐ Cab Interior (Clean)

KEY ON Procedures:
Visual/Operational inspection of controls/gauges:
- ☐ Tested/All working properly
- ☐ Checked Emergency Lowering Controls and Stop Button

Tested standard equipment:
- ☐ Steering
- ☐ Clutch/Brakes/Parking Brake
- ☐ Front/tail/brake lights
- ☐ Horn/Back up Alarm
- ☐ Safety seat/Seat belt
- ☐ Outriggers/stabilizers

Telehandler

Operator #1: _____ **Operator #2:** _____ **Foreman/Supervisor:** _____
Does this equipment need to be removed from service? Yes____ No_____

KEY OFF Procedures:
Visual inspection of:
- ☐ Work area (terrain)/Overhead clearance
- ☐ Battery & Electrical
- ☐ Hydraulic/Fuel lines
- ☐ Door/step/handrail
- ☐ Broken, Cracked or Loose Parts Forks
- ☐ Tires/Wheels/Differential
- ☐ Fluid Levels
- ☐ Check all Hoses/Belts
- ☐ Warning Decals/ Capacity Plate
- ☐ Guards/covers/ Fire extinguisher

KEY ON Procedures:
Visual/Operational inspection of controls:
- ☐ Tested/All working properly
- ☐ Checked Emergency Lowering Controls and Stop Button

Tested standard equipment:
- ☐ Drive – forward & reverse
- ☐ Steer – left & right
- ☐ Horn/Back up Alarm
- ☐ Safety interlocks
- ☐ Outriggers/stabilizers

Scissor Lift

Operator #1: _____ **Operator #2:** _____ **Foreman/Supervisor:** _____
Does this equipment need to be removed from service? Yes____ No_____

KEY OFF Procedures:
Visual inspection of:
- ☐ Work area (terrain)/Overhead clearance
- ☐ Broken, Cracked or Loose Parts
- ☐ Battery & Electrical
- ☐ Hydraulic/Fuel lines
- ☐ Step/handrail/Basket Cage and Gate
- ☐ Anchorage Points
- ☐ Tires/Wheels/Outriggers
- ☐ Fluid Levels
- ☐ Check Hoses/Belts
- ☐ Warning Decals/ Capacity Plate
- ☐ Guards/covers/ Fire extinguisher

KEY ON Procedures:
Visual/Operational inspection of controls:
- ☐ Tested/All working properly
- ☐ Checked Emergency Lowering Controls and Stop Button
- ☐ Foot Controls (if applicable)

Tested standard equipment:
- ☐ Steering
- ☐ Brakes
- ☐ Outriggers/stabilizers
- ☐ Horn/ Back up Alarm
- ☐ Safety interlocks

Boom/Aerial Lift

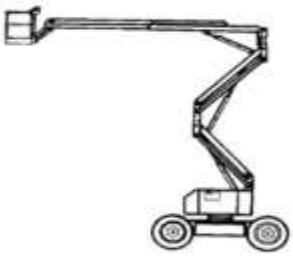

Operator #1 Signature: _____ **Operator #2 Signature:** _____

I confirm that this document has been completed properly and accurately.
I also confirm that I have reviewed this document with the operator prior to the start of shift.

Supervisor Signature: _____ **Date:** _____

Atlantic Roofers Limited North Shore Roofing Ltd Occupational Health & Safety Program	Date Last Revision: *Jan 2018*	Document No. **F-07-2**
	Title: **Fork Lift Daily Inspection**	**Page 1 of 1**

DAILY PRE-USE FORK LIFT SAFETY INSPECTION CHECKLIST

Date: _____ **Time:** _____ **Branch:** _____ **Location:**_____

Forklift Operator #1(print):_____ **Forklift Operator #1(signature)** _____

Forklift Operator #2 (print):_____ **Forklift Operator #2(signature)** _____

Key Off (Visual Check)	What to Look for	Mon		Tues		Wed		Thurs		Fri		Sat		Sun	
		OK	Repair Req'd	OK	Repair Req'd	OK	Repair Req'd	OK	Repair Req'd	OK	Repair Req'd	OK	Repair Req'd	OK	Repair Req'd
General Overview	Parking brake, fluid leaks on floor, damage, etc.														
Forks/Attachment, Backrest	Bent, cracked, locking pins, worn, mismatched														
Mast, Lift Chains, Rollers	Broken welds, cracks, bent, greased, rust														
Hydraulic Cylinders/Hoses	Leaks, damaged, bubbles/cuts on hose														
Tires/Wheel – All Tires	Lug nuts, rim damage, sidewall, tread, pressure														
Overhead Guard – All Sides	Broken welds, missing bolts, damaged areas														
Capacity Plate/Safety Decals	Legible, attached to unit														
Seatbelt/Operator Restraint	Worn, damage, working, locks when attached														
Controls and Pedal	Hydraulic controls and pedals move freely														
Counterweight	Bolts, damage, cracks in exhaust/radiator														
Propane Cylinder	Mounted properly, damage, leaks, date														
Fluid Checks (All Accessible)	Engine oil/hydraulic/brake/transmission/coolant														
Battery	Secure, cell caps, leaks, corrosion, cables														
Workplace Insp.	**What to Look for**														
Ground Conditions	Drop-offs, holes, debris, etc.														
Overhead Hazards	Structures, utility pipes, fans, lights, etc.														
Safety Items	Fire extinguisher, PPE, eye wash, first aid kit, etc.														
Key On (Oper. Check)	**What to Look for**														
Seatbelt	Seatbelt is engaged prior to any motion														
Gauges	All warning lights and gauges														
Warning Devices/Lights	Horn, backup alarm, all lights working														
Parking and Service Brake/Deadman Pedal	Parking brake holds when in gear, service brakes works travelling forward and reverse, stops unit														
All Hydraulic Operations	Proper operation and no leak through full range of motion: lift, lower, tilt, side-shift, reach, etc.														
Steering	No unusual noise, excessive free-play														

IF YOU DISCOVER ANY PROBLEMS, REPORT TO YOUR SUPERVISOR IMMEDIATELY AND DO NOT USE THE FORKLIFT!

SUPERVISOR WEEKLY VERIFICATION

I confirm that this document has been completed properly and accurately by the operator. I also confirm that I have reviewed this document with the operator prior to the start of each shift, or due to an operator change.

Supervisor Signature (End of Week)	

Atlantic Roofers Limited North Shore Roofing Ltd Occupational Health & Safety Program	Date Last Revision: *Jan 2018*	Document No. **F-07-3**
	Title: **General Roofing Equipment Daily Inspection**	**Page 1 of 1**

Operators must perform a pre-use inspection before each shift. Any equipment found to be unsatisfactory must be removed from service.
Use Rigging Inspection form F-07-4 for all slings, hooks, clamps, etc.

Jobsite Name:	**Operator:**	**Initials**
Address:	**Operator:**	**Initials**
Week: from _____ **to** _____	**Operator:**	**Initials**
(mmm/dd/yyyy) **(mmm/dd/yyyy)**	**Supervisor:**	**Initials**

ITEM	MONDAY			TUESDAY			WEDNESDAY			THURSDAY			FRIDAY			SATURDAY			SUNDAY		
Hoist (Hand & Powered)	STATUS			STATUS			STATUS			STATUS			STATUS			STATUS			STATUS		
	OK	NO	N/A	OK	NO	N/A	OK	NO	N/A	OK	NO	N/A	OK	NO	N/A	OK	NO	N/A	OK	NO	N/A
Hoist # _____																					
Hoist # _____																					
Rigging	STATUS			STATUS			STATUS			STATUS			STATUS			STATUS			STATUS		
	OK	NO	N/A	OK	NO	N/A	OK	NO	N/A	OK	NO	N/A	OK	NO	N/A	OK	NO	N/A	OK	NO	N/A
Rigging for Hoist # _____																					
Rigging for Hoist # _____																					
Roofing Kettle	STATUS			STATUS			STATUS			STATUS			STATUS			STATUS			STATUS		
	OK	NO	N/A	OK	NO	N/A	OK	NO	N/A	OK	NO	N/A	OK	NO	N/A	OK	NO	N/A	OK	NO	N/A
Kettle # _____																					
Kettle # _____																					
Sweeper	STATUS			STATUS			STATUS			STATUS			STATUS			STATUS			STATUS		
	OK	NO	N/A	OK	NO	N/A	OK	NO	N/A	OK	NO	N/A	OK	NO	N/A	OK	NO	N/A	OK	NO	N/A
Sweeper # _____																					
Sweeper # _____																					
Roof Cutter	STATUS			STATUS			STATUS			STATUS			STATUS			STATUS			STATUS		
	OK	NO	N/A	OK	NO	N/A	OK	NO	N/A	OK	NO	N/A	OK	NO	N/A	OK	NO	N/A	OK	NO	N/A
Cutter # _____																					
Cutter # _____																					
Power Buggy	STATUS			STATUS			STATUS			STATUS			STATUS			STATUS			STATUS		
	OK	NO	N/A	OK	NO	N/A	OK	NO	N/A	OK	NO	N/A	OK	NO	N/A	OK	NO	N/A	OK	NO	N/A
Buggy # _____																					
Buggy # _____																					
Company Vehicle *	STATUS			STATUS			STATUS			STATUS			STATUS			STATUS			STATUS		
	OK	NO	N/A	OK	NO	N/A	OK	NO	N/A	OK	NO	N/A	OK	NO	N/A	OK	NO	N/A	OK	NO	N/A
Vehicle # _____																					
Vehicle # _____																					
Other: _____	STATUS			STATUS			STATUS			STATUS			STATUS			STATUS			STATUS		
	OK	NO	N/A	OK	NO	N/A	OK	NO	N/A	OK	NO	N/A	OK	NO	N/A	OK	NO	N/A	OK	NO	N/A
# _____																					
# _____																					

NOTES/COMMENTS:

*** To be done weekly**

Daily PRE-USE HOIST/LIFT SAFETY INSPECTION CHECKLIST

Atlantic Roofers Limited **North Shore Roofing Ltd** Occupational Health & Safety Program	Date Last Revision: *Jan 2018*	Document No. **F-07-5**
	Title: **General Hoist Daily Inspection**	**Page 1 of 1**

Date: _____ **Time:** _____ **Branch:** _____ **Location:**_____

Hoist/Lift Operator #1(print):_____ **Hoist/Lift Operator #2(signature)** _____ **Hoist/Lift Operator #2(print):**_____ **Hoist/Lift Operator #2(signature)** _____

Visual Check	**What to Look for**	Mon		Tues		Wed		Thurs		Fri		Sat		Sun	
		OK	Repair Req'd	OK	Repair Req'd	OK	Repair Req'd	OK	Repair Req'd	OK	Repair Req'd	OK	Repair Req'd	OK	Repair Req'd
Operating mechanism	Check for proper operation and adjusts, no unusual sounds or noise due to chain binding or bearing squeal														
Hooks and Rigging	Check for distortion such as bending, twisting, or increased throat opening; wear, cracks, nicks or gouges; hook attachment and securing means														
Hook latches	check for latch engagement, damaged or malfunctioning latch, check self-locking hooks for proper operation and locking														
Wire Cable	Check for broken, bent, kinked, distorted, birdcaging, crushed or corroded wire														
Hoist leaver	Check lever for bends, cracks, or other damage														
Hoist support	Check for damage to hoist support														
Structure	No visible damage to the structural integrity. All welds in place, no evidence of damage to structure. Structure well supported														
Capacity Plate/Safety Decals	Legible, attached to unit														
Controls	Hydraulic controls move freely														
Counterweight	Have enough for work														
Safety Items	Fire extinguisher, PPE, first aid kit, etc.														
All Hydraulic Operations	Proper operation and no leak through full range of motion: lift, lower, tilt, side-shift, reach, etc.														

IF YOU DISCOVER ANY PROBLEMS, REPORT TO YOUR SUPERVISOR IMMEDIATELY AND DO NOT USE THE HOIST/LIFT!

SUPERVISOR WEEKLY VERIFICATION **I confirm that this document has been completed properly and accurately. I also confirm that I have reviewed this document with the operator prior to the start of shift.**		
Supervisor Signature (Shift Start)		**Date:**

Atlantic Roofers Limited **North Shore Roofing Ltd** Occupational Health & Safety Program	Date Last Revision: *Jan 2018*	Document No. **F-07-4**
	Title: **Company Vehicle Incident Report**	**Page 1 of 1**

Driver (print):	**Date:**	**Make/Model:**
Signature:	**(dd / mm / yyyy)**	**Year:**
Branch Location:		**Plate #:**

Date of Incident (dd/mm/yyyy):	Time of Incident:
Location of the Incident (City / Province):	
POLICE INFORMATION (Name of Officer / Badge # / Phone #): Police Report Number:	

Driver of Vehicle	Driver's Name (as shown on Driver's License):		Driver's Age:	# of Occupants in Vehicle:
	Address:	City/Province/Postal Code:		Phone #:
	Driver's License #:	Province of Issue:		

Driver/Owner of other Vehicle /Property	Driver Name:	Phone #:	E-mail:
	Address:	City/Province/Postal Code:	
	Owner Name:	Phone #:	E-mail:
	Address:	City/Province/Postal Code:	
	Name of Insurance Company & Agent:	Phone #:	Policy #:
	Vehicle Make & Year:	Plate #/Province:	# of Occupants in Vehicle:
	Describe Damage to Vehicle/Property:		

Persons Injured	Name:	City/Province/Postal Code:	Phone #:	Age:	Sex:
	Describe Injuries:				

Witnesses to Accident	Name:	City/Province/Postal Code:	Phone #/E-mail:
	Name:	City/Province/Postal Code:	Phone #/E-mail:

DRIVER STATEMENT: EXPLAIN CAUSE OF DAMAGE:

Is Vehicle Drivable?	**Indicate Damaged Area of Company Vehicle**	**Body Damage Status**
Yes ☐ No ☐	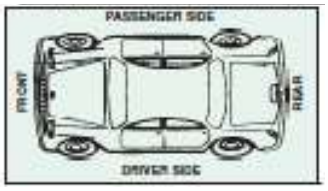	☐ Heavy ☐ Light
Current Location of Vehicle		☐ Overhead ☐ Undercarriage
_____		☐ Unknown ☐ Other Explain
If Towed, Company/Road Call #		_____
_____		_____

Draw out the incident scene. Be sure to include the locations of all witnesses, equipment, machinery, buildings, etc. in relation to the incident site.

Atlantic Roofers Limited North Shore Roofing Ltd Occupational Health & Safety Program	Date Last Revision: *Jan 2018*	Document No. **P-07-1**
	Title: **Tool / Vehicle / Equipment Maintenance**	**Page 1 of 1**

Description (Tool/Vehicle/ Equipment)	Make /Model	Serial Number	Issue	Date Out of Service	Repair Date	Corrective Action Taken	Logged by Initials

Atlantic Roofers Limited North Shore Roofing Ltd Occupational Health & Safety Program	Date Last Revision: *Jan 2018*	Document No. **S-07-1**
	Title: **Emergency Equipment Inspection**	**Page 1 of 1**

Inspection Year: _____ **Branch Location:** _____

Fire Alarm											
Jan ☐	**Feb** ☐	**Mar** ☐	**Apr** ☐	**May** ☐	**Jun** ☐	**Jul** ☐	**Aug** ☐	**Sep** ☐	**Oct** ☐	**Nov** ☐	**Dec** ☐
Remarks:											

Smoke Detectors											
Jan ☐	**Feb** ☐	**Mar** ☐	**Apr** ☐	**May** ☐	**Jun** ☐	**Jul** ☐	**Aug** ☐	**Sep** ☐	**Oct** ☐	**Nov** ☐	**Dec** ☐
Remarks:											

Fire Extinguishers											
Jan ☐	**Feb** ☐	**Mar** ☐	**Apr** ☐	**May** ☐	**Jun** ☐	**Jul** ☐	**Aug** ☐	**Sep** ☐	**Oct** ☐	**Nov** ☐	**Dec** ☐
Remarks:											

Emergency Lights											
Jan ☐	**Feb** ☐	**Mar** ☐	**Apr** ☐	**May** ☐	**Jun** ☐	**Jul** ☐	**Aug** ☐	**Sep** ☐	**Oct** ☐	**Nov** ☐	**Dec** ☐
Remarks:											

Exit Lights											
Jan ☐	**Feb** ☐	**Mar** ☐	**Apr** ☐	**May** ☐	**Jun** ☐	**Jul** ☐	**Aug** ☐	**Sep** ☐	**Oct** ☐	**Nov** ☐	**Dec** ☐
Remarks:											

Exit Doors											
Jan ☐	**Feb** ☐	**Mar** ☐	**Apr** ☐	**May** ☐	**Jun** ☐	**Jul** ☐	**Aug** ☐	**Sep** ☐	**Oct** ☐	**Nov** ☐	**Dec** ☐
Remarks:											

Sprinkler System											
Jan ☐	**Feb** ☐	**Mar** ☐	**Apr** ☐	**May** ☐	**Jun** ☐	**Jul** ☐	**Aug** ☐	**Sep** ☐	**Oct** ☐	**Nov** ☐	**Dec** ☐
Remarks:											

Voice Communications											
Jan ☐	**Feb** ☐	**Mar** ☐	**Apr** ☐	**May** ☐	**Jun** ☐	**Jul** ☐	**Aug** ☐	**Sep** ☐	**Oct** ☐	**Nov** ☐	**Dec** ☐
Remarks:											

Atlantic Roofers LIMITED | North Shore Roofing LIMITED

OUT OF SERVICE

Name of Item:_____

Serial #:_____

Remarks:_____

Out By:_____ Date:_____

In By:_____ Date:_____

Atlantic Roofers LIMITED | North Shore Roofing LIMITED

OUT OF SERVICE

Name of Item:_____

Serial #:_____

Remarks:_____

Out By:_____ Date:_____

In By:_____ Date:_____

Atlantic Roofers LIMITED | North Shore Roofing LIMITED

OUT OF SERVICE

Name of Item:_____

Serial #:_____

Remarks:_____

Out By:_____ Date:_____

In By:_____ Date:_____

Atlantic Roofers LIMITED | North Shore Roofing LIMITED

OUT OF SERVICE

Name of Item:_____

Serial #:_____

Remarks:_____

Out By:_____ Date:_____

In By:_____ Date:_____

Atlantic Roofers LIMITED | North Shore Roofing LIMITED

OUT OF SERVICE

Name of Item:_____

Serial #:_____

Remarks:_____

Out By:_____ Date:_____

In By:_____ Date:_____

Atlantic Roofers LIMITED | North Shore Roofing LIMITED

OUT OF SERVICE

Name of Item:_____

Serial #:_____

Remarks:_____

Out By:_____ Date:_____

In By:_____ Date:_____

Atlantic Roofers LIMITED | North Shore Roofing LIMITED

OUT OF SERVICE

Name of Item:_____

Serial #:_____

Remarks:_____

Out By:_____ Date:_____

In By:_____ Date:_____

Atlantic Roofers LIMITED | North Shore Roofing LIMITED

OUT OF SERVICE

Name of Item:_____

Serial #:_____

Remarks:_____

Out By:_____ Date:_____

In By:_____ Date:_____

Atlantic Roofers LIMITED | North Shore Roofing LIMITED

OUT OF SERVICE

Name of Item:_____

Serial #:_____

Remarks:_____

Out By:_____ Date:_____

In By:_____ Date:_____

7.3 Service Maintenance Report

Service & When Needed (Kilometers)	Every 5,000 KM	Every 10,000 KM	Every 25,000 KM	Every 50,000 KM	Every 75,000 KM	Every 100,000 KM	Every 125,000 KM	Every 150,000 KM	Every 175,000 KM	Every 200,000 KM
Lubrication, Oil & Filter (Every 5,000 KM or 3 months)	X	X	X	X	X	X	X	X	X	X
Air Filter – Inspect/Replace (Every 5,000 KM)	X	X	X	X	X	X	X	X	X	X
Drive Axle Boots & Seals (Inspect every 5,000 KM)	X	X	X	X	X	X	X	X	X	X
Battery Inspection (Every 5,000 KM)	X	X	X	X	X	X	X	X	X	X
PCV Valve (Replace as needed / Inspect every 10,000 KM)		X		X		X		X		X
Brake Inspection (Every 10,000 KM)		X		X		X		X		X
Tire Rotation & Inspection (Every 10,000 KM)		X		X		X		X		X
Tire Balance (Every 25,000 KM or 12 months)			X	X	X	X	X	X	X	X
Clean & Adjust Rear Brakes (As required or every 10,000 KM)		X		X		X		X		X
Brake System Flush (Every 50,000 KM or 2 years)				X		X		X		X
Wiper Blades (Replace every 12 months)			X	X	X	X	X	X	X	X
Wheel Alignment/Inspection (Every 25,000 KM or 12 months)			X	X	X	X	X	X	X	X
Fuel Filter Replacement (Every 50,000 KM or 2 years)				X		X		X		X
Transmission Flush (Every 50,000 KM or 2 years)				X		X		X		X
Fuel Injection Service (Every 25,000 KM or 12 months)			X	X	X	X	X	X	X	X
Maintenance Tune-Up (As required)						X				X
Power Steering Flush (Every 25,000 KM or 12 months)			X	X	X	X	X	X	X	X
Air Intake Service (Every 25,000 KM or 12 months)			X	X	X	X	X	X	X	X
Coolant System Flush (Every 50,000 KM or 2 years)				X		X		X		X
Replace Belts & Hoses (Every 50,000 KM or 3 years)				X		X		X		X
Timing Belt (Every 100,000 KM)						X				x
Drive Clean(Emission testing every 2 years)				X		X		X		X
Shocks & Struts (Inspect every 80,000 Km or as required)					X			X		

7.4 Section 7 Proof of Review

Section / Form	Development			Revised			Reviewed		
	Date		By Whom	Date		By Whom	Date		By Whom
	M	Y		M	Y		M	Y	
7.1	03	05	Br. Mgrs.				01	19	JHSC
7.2	03	05	Br. Mgrs.				01	19	JHSC
F-07-1	01	14	T. Firth				01	19	JHSC
F-07-2	01	14	T. Firth				01	19	JHSC
F-07-3	01	14	T. Firth				01	19	JHSC
F-07-4	01	14	T. Firth	04	2018	E Joy	01	19	JHSC
P-07-1	01	14	T. Firth				01	19	JHSC
S-07-1	01	14	T. Firth				01	19	JHSC
Tags	01	14	T. Firth				01	19	JHSC
7.3	01	14	T. Firth				01	19	JHSC

118 Cocagne Cross Road
Cocagne, NB E4R 2J2
Tel.: (506) 576-6683 Fax: (506) 576-9714

TRAINING AND COMMUNICATIONS

Section 8

Section 8

Training and Communication

8.1 Training and Communication Policy……8.3

8.2 Orientations……8.6

S-08-1 General Roofing Equipment Daily Inspection……8.7

F-08-1 Visitor Safety Orientation……8.8

8.3 Toolbox Meeting Record……8.9

F-08-2 Toolbox Meeting Record……8.10

8.4 Employee Training Record……8.11

S-08-2 Employee Training Record……8.12

8.5 Section 8 Proof of Review……8.13

118 Cocagne Cross Road
Cocagne, NB E4R 2J2
Tel.: (506) 576-6683 Fax: (506) 576-9714

TRAINING AND COMMUNICATION POLICY

Section 8.1

Training and Communication Policy

Purpose

Safety Training and Participation in Safety meetings by all levels of employees in the Company is vital to the success of the Health & Safety Program and Loss Control. Safety training and meetings serve three (3) purposes and are a means of:

1. Providing a vehicle to keep Company employees, at all levels, current with Occupational Health and Safety requirements.
2. Encouraging participation in Health & Safety through an exchange of communication, ideas and experience.
3. Achieving a standard of Due Diligence by ensuring all reasonable measures are taken to protect and inform workers of potential hazards and the necessary accident prevention measures.

Policy

Atlantic Roofers Limited/North Shore Roofing Ltd. is committed to providing all employees with the current Occupational Health and Safety information required to perform their assignments in the safest possible manner. The Occupational Health and Safety Act, Regulations and *Atlantic Roofers Limited/North Shore Roofing Ltd.* Health and Safety policy requires that employees, and managers/supervisors receive information and training regarding their duties under the policy and the Act, including JOHSC/Representative training, hazard reporting and control, safe work practices, job procedures and the health and safety program.

New Employee Safety Orientation

All employees must attend an orientation session designed to introduce the health and safety program. The orientation will be conducted prior to beginning work. Managers or their designate are responsible to ensure orientations are provided to new employees using S-08-1 Employee Safety Orientation. The Employee Safety Orientation Form (S-08-1) will be completed and signed by management and the employee. A copy of the signed checklist will be retained on file by management.

WHMIS Training

All *Atlantic Roofers Limited/North Shore Roofing Ltd.* employees working with, or in close proximity to hazardous materials must be trained in the Workplace Hazardous Materials Information System (WHMIS) upon start of employment with a review annually.

Specialized Safety Training

Any training required under the OH&S Act and Regulations will be provided by a competent trainer or an accredited training organization. Where appropriate, employees must receive other training required under the OH&S Act including, First Aid, Fire Extinguisher, Fall Protection, Confined Space, etc.

Refresher/ Upgrade Training

To be in compliance with the OH&S Act and Regulations and company policies, employees may be required to participate in refresher / upgrade training programs.

Management/Supervisor Training

Any training required for management and supervisory personnel will be provided by a competent trainer or an accredited organization. Training suggested for management/supervisors include, but are not limited to Due Diligence, the Occupational Health and Safety Act, Accident Investigation, JOHS Committee, Hazard Identification, Workplace Inspections, etc.

JOHSC/Representative Training

Training for JOHS Committee members to help fulfill their role on this very important committee will be outlined in the Terms of Reference.

Working Visitors

For persons entering our project site for the purpose of collecting data, inspecting or completing a task must have a Visitor Orientation.

Occupational Health and Safety Meetings

Atlantic Roofers Limited/North Shore Roofing Ltd. will communicate occupational health and safety information, employee concerns and recommendations through the following meetings:

1. **Toolbox Meetings**

   Toolbox Meetings are an important part of our health and safety program and must be attended by **all** employees. Toolbox meetings can be used to promote safety, identify hazards, review rules and discuss safe work practices/job procedures.

   While on job sites that last more than one week, each Supervisor must conduct at least one safety meeting each week with their assigned crews and record minutes and attendance to the meeting. The first Toolbox meeting of the project will be a review of the jobsite hazard assessment. Crewmembers must sign their own name to the meeting minutes. All fixed locations will hold a safety meeting at least bi-annually.

2. **Joint Occupational Health and Safety Committee Meetings (JOHSC)**

   JOHSC meetings must be conducted to discuss and resolve health and safety issues. Minutes and attendance must be recorded and minutes must be posted at the worksite/branch office. Those employees unable to attend any JOHSC meeting will receive a copy of those minutes for their review and comments. A site-specific Terms of Reference must been developed for each division. This Terms of Reference identifies all requiring aspects of the JOHSC (i.e. legal quorum, agenda, etc).

Occupational Health and Safety Meetings

Atlantic Roofers Limited/North Shore Roofing Ltd. will keep records of all training and meeting with achievement level and dates if appropriate. For record keeping purposes, each division/branch is required to keep a training database with the name of the employee, required training, completion date, and expiry date of training. Copies of safety training records will be kept in the employee's personnel file.

****The policies and procedures contained within this Health and Safety program do not take precedence over any Occupational Health Safety and/or Environmental legislation in the jurisdiction in which the work is being carried out. All employees and contractors will familiarize themselves with all Provincial, Federal and/or State Occupational Health, Safety and Environmental Acts, Regulations, Policies and other legislative requirements prior to commencing work on any site or project.***

Yves Bradet, General Manager
Atlantic Roofers Limited

Jan 14/19
Date

Terry Casey, General Manager
North Shore Roofing Ltd.

Jan 14/19
Date

118 Cocagne Cross Road
Cocagne, NB E4R 2J2
Tel.: (506) 576-6683 Fax: (506) 576-9714

ORIENTATIONS

Section 8.2

Atlantic Roofers Limited North Shore Roofing Ltd Occupational Health & Safety Program	Date Last Revision: *Jan 2018*	Document No. **S-08-1**
	Title: **General Roofing Equipment Daily Inspection**	**Page 1 of 1**

Employee Information

Employee Name: _____	Date: _____
Job Title: _____	Hire Date: _____
Supervisor: _____	Department: _____

Previous Valid Safety Training

Course/Training	Copy Provided	Date Course/Training Taken	Expiry Date
☐ WHMIS	☐		
☐ Fall Protection	☐		
☐ First Aid Level	☐		
☐ CPR Level	☐		
☐ Driver's License #: _____	☐		
☐ Other: _____	☐		

Orientation Review

☐ **1. Company Health & Safety Policy**
☐ Employee Rights

☐ **2. Hazard Assessment Policy**
☐ Hazard Assessments Frequency
☐ Hazard Assessment Employee Involvement

☐ **3. Safe Work Practices**

☐ **4. Job Procedures**

☐ **5. Company Rules**

6. Personal Protective Equipment
☐ Personal Protective Equipment Policy
☐ Eye and Face Protection
☐ Fall Protection
☐ Foot Protection
☐ Head Protection
☐ Hearing Protection
☐ Limb & Body Protection
☐ Respiratory Protection
☐ Specialized PPE

7. Preventative Maintenance
☐ Preventative Maintenance Policy
☐ Defective Equipment

8. Training and Communications
☐ Training and Communications Policy
☐ Tool Box Meetings

9. Inspections
☐ Inspection Policy
☐ Inspection Procedure

10. Investigations
☐ Investigation Policy

11. Environmental Policy

12. Emergency Preparedness
☐ Emergency Preparedness Policy
☐ Fire
☐ First Aid
☐ Communications
☐ Fall Arrest Rescue Plan

☐ **13. Records & Statistics**

14. HR Policies
☐ Cell Phone Policy
☐ Drug & Alcohol Policy
☐ Ergonomic Policy
☐ Harassment Policy
☐ Early Safe Return to Work Policy
☐ Personal Hygiene Policy
☐ Workplace Violence Policy

15. Legislation & Reference
☐ Occupational Safety General Regulations
☐ Fall Protection Regulations
☐ First Aid Regulations
☐ WHMIS Regulations

☐ **16. JOHS Committee/Safety Rep.**
Introduction

☐ _____
☐ _____

I have attended Atlantic Roofers Limited/North Shore Roofing Ltd. Employee Safety Orientation and understand all policies, rules and procedures. I am aware that there is a Safety Manual Binder located in each Branch Office and a 5 x 7 Safety Manual in each Company Vehicle that is available and accessible to me for my use.

Employee's Signature: _____ **Trainer's Signature:** _____

Atlantic Roofers Limited North Shore Roofing Ltd Occupational Health & Safety Program	Date Last Revision: *Jan 2018*	Document No. **F-08-1**
	Title: **Visitor Safety Orientation**	**Page 1 of 1**

Visitor Information

Visitor Name: _____ Date: _____

Company Name: _____ Project Name: _____

Site Foreman: _____ Project Location: _____

Visitor Policy Statement

Atlantic Roofers Limited/North Shore Roofing Ltd. is committed to providing a healthy and safe work environment for our employees, as well as any person who visits our worksites.
For insurance and safety reasons, no one under the age of 16 years is to be in the shop or on job sites at any time.

Visitor Rules

1. Obtain verbal permission from the site supervisor before entering the site.
2. Follow all applicable *Atlantic Roofers Limited/North Shore Roofing Ltd.* rules and perform activities in accordance with the Occupational Health and Safety Act and Regulations.
3. Locate the nearest first aid kits, fire extinguishers and emergency muster points.
4. Do not interrupt or disturb any working employees.
5. Obey all warning signs and tags.
6. Report any unsafe acts, conditions and incidents to the supervisor.
7. All visitors must wear the appropriate personal protective equipment. PPE is not required if the visitor remains inside a vehicle.

Site Specific PPE Requirements (✓ required items)

- ☐ Head Protection
- ☐ Foot Protection
- ☐ Gloves
- ☐ Long Sleeve Shirt
- ☐ Long Pants
- ☐ Chain Saw Pants
- ☐ Fire Resistant Coveralls
- ☐ Fire Resistant Wrist Guards
- ☐ Safety Glasses
- ☐ Safety Goggles
- ☐ Face Shield
- ☐ Face Protection
- ☐ Hearing Protection
- ☐ Dust Mask
- ☐ Respirator
- ☐ Full Body Harness
- ☐ Lanyard with Shock Absorber
- ☐ Horizontal Lifeline
- ☐ Vertical Lifeline
- ☐ Rope Grab
- ☐ Self-Retracting Lanyard

Muster Point: _____

I have attended _____ **Visitor Safety Orientation and understand all policies, rules and procedures.**
General Contractor/Building Owner

☐ **Yes** ☐ **No**

I have attended Atlantic Roofers Limited/North Shore Roofing Ltd. Visitor Safety Orientation and understand all policies, rules and procedures.

Visitor's Signature: _____ **Supervisor's Signature:** _____

118 Cocagne Cross Road
Cocagne, NB E4R 2J2
Tel.: (506) 576-6683 Fax: (506) 576-9714

TOOL BOX
MEETING RECORD

Section 8.3

Atlantic Roofers Limited **North Shore Roofing Ltd** Occupational Health & Safety Program	Date Last Revision: *Jan 2018*	Document No. **F-08-2**
	Title: **Tool Box Meeting Record**	**Page 1 of 1**

Job Site Information

Project Name: _____ Date: _____

Project Location: _____ # of Crew: _____

Presented By: _____ Site Foreman: _____

Persons Present

Print Name	Signature	Print Name	Signature

Review Previous Meeting

Safety Topic(s) Discussed

Workers Concerns

Suggestions Offered

Corrective Action It is the responsibility of the foreman to ensure that all corrective actions are completed & reviewed for effectiveness.	**Person Responsible**	**Action Complete**	
		Sign Off	**Date**

Injuries / Incidents Reviewed

Presenter's Signature: _____ **Management Signature:** _____

118 Cocagne Cross Road
Cocagne, NB E4R 2J2
Tel.: (506) 576-6683 Fax: (506) 576-9714

EMPLOYEE TRAINING RECORD

Section 8.4

Atlantic Roofers Limited **North Shore Roofing Ltd** Occupational Health & Safety Program	Date Last Revision: *Jan 2018*	Document No. **S-08-2**
	Title: **Employee Training Record**	**Page 1 of 1**

Employee Name:	Date of Hire:
Position:	

Name of Course	Course Provider	Date Completed	Expiry Date	Employee Signature

8.5 Section 8 Proof of Review

Section / Form	Development			Revised			Reviewed		
	Date		By Whom	Date		By Whom	Date		By Whom
	M	Y		M	Y		M	Y	
8.1	03	05	Br. Mgrs.				01	19	JHSC
8.2	03	05	Br. Mgrs.				01	19	JHSC
S-08-1	01	14	T. Firth				01	19	JHSC
F-08-1	01	14	T. Firth				01	19	JHSC
8.3	03	05	Br. Mgrs.				01	19	JHSC
F-08-2	03	05	Br. Mgrs.				01	19	JHSC
8.4	01	14	T. Firth				01	19	JHSC
S-08-2	01	14	T. Firth				01	19	JHSC

118 Cocagne Cross Road
Cocagne, NB E4R 2J2
Tel.: (506) 576-6683 Fax: (506) 576-9714

INSPECTIONS

Section 9

Section 9

Inspections

9.1 Inspection Policy……9.3

9.2 Procedures for Planned Inspections……..9.6

9.3 Inspection Forms……..9.9

S-09-1 Monthly Inspection Report……..9.10

9.4 Section 9 Proof of Review……9.12

118 Cocagne Cross Road
Cocagne, NB E4R 2J2
Tel.: (506) 576-6683 Fax: (506) 576-9714

INSPECTION POLICY

Section 9.1

Inspection Policy

Purpose

The purpose of this policy is to control losses of human and material resources by identifying and correcting unsafe acts and conditions, ensuring that existing controls are functioning adequately and, when appropriate, recommending corrective actions.

Policy

Atlantic Roofers Limited/North Shore Roofing Ltd. is committed to maintaining a comprehensive inspection program that will include all of its facilities and project locations. Inspections will consist of the following components:

Field Level Hazard Assessments

Regular Field Level Hazard Assessments must be conducted by each supervisor/foreman on their work areas and document the results on the Daily Field Level Hazard Assessment Form. Upon notice of conditions that require attention, the supervisor is responsible to ensure prompt corrective action, and communicate risks and results to all workers.

Pre-Use Equipment Inspections

Pre-use equipment inspections must be completed by each operator on their work areas and document the results on specific assessment form. Upon notice of conditions that require attention, the operator must communicate any defects or non-compliant issues to the supervisor, tag the equipment and take it out of service. The supervisor is responsible to ensure prompt corrective action and communicate risks and results to all workers.

The frequency of the pre-use equipment inspections will be determined by the Provincial regulations, and be reflected on the inspection documents, and communicated to all workers and supervisors.

Monthly JOHSC/Representative Inspections

At a minimum, formal inspections shall be conducted by the JOHSC/Representative on a monthly basis using the Workplace Inspection Form. The completed form will be forwarded to the OHS Coordinator for review and follow-up.

Job Site Safety Audits

The Safety Coordinator will conduct regular jobsite inspections through the year, to verify the OHS Program is functioning as intended. The results of every audit will be shared with workers, supervisors, and management. Management and Foreman will be responsible for all audit follow-ups that arise from audit findings.

Management Inspections

Management personnel will conduct their own inspections on a random basis. These inspections may include jobsites, office, shops, or warehouses. These inspections will be walk through type inspections. Management shall provide support to supervisors by acquiring equipment as is necessary to ensure safety at the worksites.

Monitoring

The supervisor will monitor progress on corrective actions by reviewing the inspection at their regular toolbox meetings. Branch Managers are responsible for ensuring that the inspection program is maintained and carried out in accordance with this Inspection Policy.

Inspections	Frequency
Field Level Hazard Assessments	Daily
Pre-use Equipment Inspections	Daily (If equipment is in use)
Warehouse/Office Inspections	Monthly
Job Site Safety Audits	On going
Management Inspections	Minimum 1 inspection per project
Monitoring	On going

****The policies and procedures contained within this Health and Safety program do not take precedence over any Occupational Health Safety and/or Environmental legislation in the jurisdiction in which the work is being carried out. All employees and contractors will familiarize themselves with all Provincial, Federal and/or State Occupational Health, Safety and Environmental Acts, Regulations, Policies and other legislative requirements prior to commencing work on any site or project.***

Yves Bradet, General Manager
Atlantic Roofers Limited

Jan 14/19
Date

Terry Casey, General Manager
North Shore Roofing Ltd.

Jan 14/19
Date

118 Cocagne Cross Road
Cocagne, NB E4R 2J2
Tel.: (506) 576-6683 Fax: (506) 576-9714

PROCEDURES FOR PLANNED INSPECTIONS

Section 9.2

Planned Inspection

General

During an inspection, activities and conditions in the workplace are carefully examined to measure compliance with company rules, policies, procedures and legislation. Situations that have the potential to cause injury or damage (sometimes called unsafe acts and conditions) are identified and corrective action is initiated.

Hazards Present

• Inhalation of Fumes	• Slips/Trips	• Falls
• Burns	• Cuts/Bruises	

Protective Mechanisms

• PPE	• WHMIS Training	• Fall Protection Training

Equipment / Tools Required

• Inspection Form (paper/electronic)	• Pen/Clipboard	• Previous Inspection Report
• Camera	• Small Flashlight	• Bottled Drinking Water

Do ✓

- DO check toxic hazards of all solvents (MSDS sheets available)
- DO use appropriate respiratory protection
- DO ensure flammable solvents are stored in special storage containers
- DO ensure manufacturers manuals are available
- DO be prepared to answer questions
- DO be polite
- DO follow all site rules and regulations

Do Not ✗

- DO NOT place blame. The goal is to correct unsafe acts and conditions to work safe.
- DO NOT assume…..verify
- DO NOT let your temper get the best of you
- DO NOT have a confrontational attitude
- DO NOT wait for a regulatory visit before addressing non-compliance
- DO NOT manage the people, manage the problem

Procedure

1) **Before you go**
   a) Have forms and required items on hand.
   b) Bring the site contact phone number with you.
   c) Acquaint yourself with the general layout of the work area.
   d) Get and fit safety equipment that may be required.
   e) A camera is useful for later reference (small pocket camera or cell phone). Keep a written log of where and what you took a picture of.
   f) A small flashlight is useful for enclosed rooms and in between walls.
   g) A pocket tape measure can be a handy item.

2) **Upon arrival at job site**
   a) Identify the inspection team.
   b) Review reports from previous inspection.
   c) Ensure you have all the necessary equipment and PPE to do the inspection.

Planned Inspection

Procedure (con't)

3) Conducting the inspection

a) Proceed with the inspection tour.
b) During the tour, get off the "beaten path".
c) Look over, under, around, behind, inside, etc.
d) Take the time to observe the activities of all personnel.
e) Take immediate corrective action where there is imminent danger.
f) Record all unsafe acts and conditions.

4) Completion of inspection

a) Rank the unsafe acts/conditions on a "worst case first basis".
b) Identify corrective action required for each unsafe act/condition.
c) Assign a person responsible for each corrective action and a date for completion.
d) Distribute copies of the inspection report to all employees at safety meeting.
e) Maintain records for management review and considerations.

REFERENCES:
Form F-09-1 Bi-Weekly Inspection
Form S-09-1 Monthly Inspection

Please contact Safety Coordinator @ 506-576-6683, if you have any questions regarding what is expected for the procedure or for clarification

The information contained in this publication is intended for general use and may not apply to every circumstance. It is not a definitive guide to government legislation and does not relieve persons using this publication from their responsibilities under the Workplace Safety and Health Act or applicable legislation.
The appropriate regulations and statutes should always be consulted and adhered to. Atlantic Roofers Limited/North Shore Roofing Ltd. and its affiliates do not guarantee the accuracy of, nor assume liability for the information presented here.

118 Cocagne Cross Road
Cocagne, NB E4R 2J2
Tel.: (506) 576-6683 Fax: (506) 576-9714

INSPECTION FORMS

Section 9.3

Atlantic Roofers Limited **North Shore Roofing Ltd** Occupational Health & Safety Program	Date Last Revision: *Jan 2018*	Document No. **S-09-1**
	Title: **Monthly Inspection**	**Page 1 of 2**

Floors and Walkways	✓	X	N/A	**Storage/Warehouse**	✓	X	N/A
Are the office and back shop areas accessible and clear of garbage and debris?				Are supplies and materials stored properly on shelves?			
Are all main traffic areas in the entire building clear and have at least 1 m (36 in.) wide of clearance?				Does your storage layout minimize lifting problems?			
Are doorways unobstructed and clear of materials or equipment?				Are trolleys or dollies available to move heavy items?			
Are carpets and tiles in good condition and free of damage?				Are floors around shelves clear of rubbish?			
Are wet floor signs readily available and in easily accessible locations throughout the store?				Are racks and shelves in good condition?			
Are floors clean and free of debris? Are Wet Floor signs used and available at all times?				Are all loose or packaged products on shelves or pallets and at least 6 inches off the floor? There is no exception			
If supplies or materials are stored on the floor, are they away from doors and aisles and stacked properly and very stable?				Can you freely move through the back shop to inspect? Please take into account that there will be exceptions when deliveries arrive, your answer should reflect your observations over the last month.			
Stairs, Ladders, and Platforms	✓	X	N/A	**Electrical**	✓	X	N/A
Are ladders safe and in good condition? They must meet a minimum CSA grade 1 or 2 level.				Is there clear access to electrical panels and switch gear?			
Are stair handrails fastened to the wall securely?				Are electrical cords secured?			
Are stairwells clear of materials and equipment?				Are proper plugs used?			
Are stairs and handrails in good condition?				Are plugs, sockets, and switches in good condition?			
Are ladders stored properly when not in use? Must be suspended off the floor, such as hooked on a wall.				Are ground fault circuit interrupters available, if required?			
				Does your location have lockout kit(s)?			
Walls and Ceilings	✓	X	N/A	**Equipment and Machinery**	✓	X	N/A
Are pictures, signs and fixtures securely fastened to the wall/Ceiling?				Are equipment and machinery kept clean? Take into account in case the equipment is being used during your inspection.			
Are all fixtures attached and fastened correctly? Must be secure and not dangling.				Is the equipment regularly maintained?			
Lighting	✓	X	N/A	Are operators properly trained on all equipment?			
Are lighting levels in work areas adequate?				Are start-stop switches clearly marked and in easy reach?			
Are all lights illuminated? If there are any lights not working, they must be replaced immediately.				Is machinery adequately guarded?			
Is task lighting provided in areas of low light or high glare?				Is there enough work space?			
Garbage	✓	X	N/A	Are noise levels controlled?			
Are bins located at suitable points?				Do you have a lockout procedure in place?			
Are bins emptied regularly?							

Fire Safety and Security	✓	X	N/A	WHMIS	✓	X	N/A
Are fire extinguishers clearly marked? All Fire extinguishers given 3 point inspection				Are material safety data sheets (MSDSs) provided for all cleaners used by employees? They must be available wherever cleaners are stored or used			
Are fire extinguishers properly installed on walls?				Are cleaners clearly labeled?			
Have fire extinguishers been inspected within the last year?				Are hazardous materials properly stored?			
Are workers trained to use fire extinguishers?				Can an employee explain how to use a cleaner and what the procedure is if there was an accident?			
First Aid	✓	X	N/A				
Are all first aid kits accessible and clearly labeled?				Do workers know where to find MSDSs for chemical products?			
Are all first aid kits adequate and complete?				Do workers know where to find personal protective equipment (for example, disposable gloves or eye protection)?			
Is the first aid kit clean and dry?				Do workers know how to use personal protective equipment?			
Are emergency numbers displayed?							
Are accident report forms readily available for all supervisors?				**General Worker Questions**	✓	X	N/A
Is there verification of what has been used and what needs to be replenished? (inventory book/sheet)				Do workers know where to go and who to call for first aid assistance?			
				Do workers know every members name on the committee?			
Other	✓	X	N/A	**General Conditions**	✓	X	N/A
Office Chairs in good condition?				Are All Emergency exits marked and unobstructed?			
Workstations in good condition?				Are emergency lighting units provided? Are they working?			
				Are emergency exits clear of materials or equipment?			
				Break room kept clean and clear of debris			
				Are emergency exit signs working?			
				Are Washrooms in good working order, clean and well stocked?			
				Are Receiving doors in good working condition?			
				Does emergency lighting work? Every emergency light fixture must be tested monthly			

9.4 Section 9 Proof of Review

Section / Form	Development			Revised			Reviewed		
	Date		By Whom	Date		By Whom	Date		By Whom
	M	Y		M	Y		M	Y	
9.1	03	05	Br. Mgrs.				01	19	JHSC
9.2	03	05	Br. Mgrs.				01	19	JHSC
JP # 36	01	14	T. Firth				01	19	JHSC
9.3	01	14	T. Firth				01	19	JHSC
S-09-1	01	14	T. Firth	04	2018	E.Joy	01	19	JHSC
04							01	19	

118 Cocagne Cross Road
Cocagne, NB E4R 2J2
Tel.: (506) 576-6683 Fax: (506) 576-9714

INVESTIGATIONS

Section 10

Section 10

Investigations

10.1 Investigation Policy……..10.3

10.2 When an Accident Happens……..10.7

10.3 Investigation Forms……10.9

F-10-1 Incident Report Form……10.10

S-10-1 Investigation Report Form…….10.11

S-10-2 WorkSafe Reporting……...10.15

10.4 Section 10 Proof of Review……...10.16

118 Cocagne Cross Road
Cocagne, NB E4R 2J2
Tel.: (506) 576-6683 Fax: (506) 576-9714

INVESTIGATION POLICY

Section 10.1

Investigation Policy

Purpose

Investigations shall be conducted to determine the causes of incidents so that appropriate action can be taken to prevent recurrence. The role of incident investigation in a health and safety program is prevention. Therefore it is important to investigate not only the incidents which cause the incident, but also near misses because of their potential if the circumstances had only been slightly different.

Definitions

Incident

An incident is any unplanned or unwanted event, which resulted in injury or damage to equipment, property, process, or environment.

Near Miss

A Near Miss is an undesired event, which in different circumstances could have resulted in harm to people, damage to property, and/or loss to a process.

Medical Aid

Medical Aid is considered to be treatment given by a medical doctor/nursing practitioner.

First Aid

Emergency care rendered to an injured or ill employee that conforms to the recommended practice of the St. John Ambulance Association/Red Cross or other organization recognized by Health Canada and that is provided by the department or an organization in respect of an injury or illness of an employee arising out of or in the course of employment.

Minor Injury

A Minor Injury is any occupational injury or disease for which first aid or medical treatment is provided and that excludes disabling injury.

Bodily Injury

Bodily Injury includes “unconsciousness, loss of a substantial amount of blood, fracture of a leg or arm, amputation of a leg, arm, hand or foot, burns to a major part of the body, loss of sight in an eye and any injury that place life in jeopardy.”

Policy

Atlantic Roofers Limited/North Shore Roofing Ltd. will investigate any incident that could have resulted in injury or property damage and ALL incidents that do result in injury or property damage to determine the cause and corrective actions that are required to prevent any recurrence. Investigation team members are provided training on investigation techniques. Members of the incident investigation team shall be qualified and competent individuals.

Responsibilities

Management

1. Ensures that incidents are investigated to determine cause.
2. Ensures appropriate measures are implemented to prevent recurrence.

Supervisor

1. Take action immediately upon report of an incident.
2. Ensure all incidents are investigated by all those involved (including subcontractors).
3. Conduct follow-up to ensure any recommendation(s) has been implemented.

Workers

1. Report any and all incidents to their immediate supervisor. If immediate supervisor is unavailable, the employee should report it to the JOHSC or Safety Representative.
2. Cooperate in the completion of the incident investigation form.
3. Cooperate in the investigation of the incident and establishment of corrective actions.

JOHSC/Representative

1. Investigate as per its Terms of Reference.
2. Review incident reports.
3. Make recommendations for corrective actions.

Incident Investigation Process

Supervisor Responsibility

1. Report incident to management and safety coordinator immediately.
2. Supervisors to investigate all incidents as soon as they happen.
3. Written report to be submitted to JOHSC/Representative within 24 hours.
4. Written report to be forwarded to management within 48 hours.

Management/Safety Coordinator Responsibility

1. Provide or pay the cost of immediate transportation from the injury site to a medical treatment facility.
2. Report the injury to WorkSafeNB:
   a) **Immediately**, if the accident results in or may result in a fatality, loss of limb, occupational disease.
   b) **Within 24 hours of occurrence**, in the case of an accidental explosion or an accidental exposure to a biological, chemical or physical agent at a workplace.
3. Immediate notification can be made by
   NB fax:1-888-629-4722, or tel: 1-800-222-9775
   NS fax: 1-902-491 8001, or tel: 1-902-491-8999
   PE fax: 1-902-368-5696, tel: 1-902-368-5680
   NL fax: 1-800-276-5257 tel: 1-800-563-9000
   a) location
   b) name of person injured, if any
   c) employer name
   d) contact person
   e) brief description of the event.
4. See form S-10-1 for additional reporting requirements.

Investigation Technique

1. Secure the scene.
2. Provide care to the injured.
3. Secure the area with red tape to prevent other workers from disturbing the incident scene.

4. Determine what happened.
5. Interview witnesses.
6. Collect and safeguard any physical evidence.
7. Obtain other evidence such as – photographs, diagrams, and statements.
8. Determine what corrective action will prevent recurrence.
9. Complete Incident Investigation Report the same day.
10. Follow-up – ensure control measures have been put in place and are effective.

****The policies and procedures contained within this Health and Safety program do not take precedence over any Occupational Health Safety and/or Environmental legislation in the jurisdiction in which the work is being carried out. All employees and contractors will familiarize themselves with all Provincial, Federal and/or State Occupational Health, Safety and Environmental Acts, Regulations, Policies and other legislative requirements prior to commencing work on any site or project.***

Yves Bradet, General Manager
Atlantic Roofers Limited

Jan 14/19
Date

Terry Casey, General Manager
North Shore Roofing Ltd.

Jan 14/19
Date

118 Cocagne Cross Road
Cocagne, NB E4R 2J2
Tel.: (506) 576-6683 Fax: (506) 576-9714

WHEN AN ACCIDENT HAPPENS

Section 10.2

When an Accident Happens

What Workers Must Do

- Report the accident to Atlantic Roofers as soon as possible and in accordance with the workplace procedure set out by Atlantic Roofers for the reporting of accidents.
- If you have sought medical attention and/or have missed time from work due to the injury, you can apply for compensation benefits by:
    - NB – Completing Form 67, Report of Accident or Occupational Disease.
        - Form 67 is available at : www.worksafenb.ca Under Forms
    - NS – Your Case Worker will send you the relevant forms to complete.
        - The Claims process can be found at: www.wcb.ns.ca Under Claims Process
    - PEI – Your Case Worker will send you the relevant forms to complete
        - The Claims Process can be found at: www.wcb.pe.ca Under Workers
    - NL – Completing Injury Report – Worker's (6) and submitting it along with any physician's reports
        - Injury Report – Work's (6) can be found under: www.workplacenl.ca Under Submitting a new Claim
- Atlantic Roofers will assist in the completing of all forms

What Atlantic Roofers Must Do

- First step is to establish a workplace procedure informing workers of their requirement to notify you of any accident before leaving the place of employment.
- If an accident happens, you must:
    - Provide first aid
    - Maintain a logbook of all injuries requiring first aid treatment
    - When medical attention beyond first aid is needed, ensure that the emergency transportation procedure is followed.
- Immediately Call the following numbers to report:
- **NB – 1-800-229-9775**
- **NS – 1-800-952-2687**
- **PEI – 902-628-7513**
- **NL – 1-800-563-5471**
    - Any accidental explosion or exposure to a biological, chemical, or physical agent, whether or not a person is injured
    - Any catastrophic event or equipment failure that results, or could have resulted in any injury
    - Worker admission to a hospital facility as an in patient
    - A loss of consciousness
    - Burnes requiring medical attention beyond first aid treatment
    - Fractures (other than to fingers or toes)
    - Loss of vision in one or both eyes
    - Deep lacerations requiring medical attention beyond first aid treatment
    - Amputations
    - Fatalities

- If the worker has sought medical attention and/or has missed time from work, YOU MUST COMPLETE All necessary forms and submit within 2 DAYS to required Workers compensation boards.

118 Cocagne Cross Road
Cocagne, NB E4R 2J2
Tel.: (506) 576-6683 Fax: (506) 576-9714

INVESTIGATION FORMS

Section 10.3

Atlantic Roofers Limited North Shore Roofing Ltd Occupational Health & Safety Program	Date Last Revision: *Jan 2018*	Document No. **F-10-1**
	Title: **Incident Report**	**Page 1 of 1**

Incidents can be anything from a first aid incident to a serious injury, violence, theft, or a heated discussion with an upset client or co-worker. An incident can also be a potentially hazardous situation. For example, power cords are stretched across an area and not removed while employees go to lunch. Nothing has happened yet but a concerned employee/foreman just wants to bring this to the organization's attention to prevent an accident from happening.

An incident report should be done as soon as possible, as details of an incident slip fast and key contact information of witnesses can be difficult to access later. The incident report can be a very useful tool for follow-up and is key in case of more serious incidents, especially when injury or damage has occurred. We encourage you to submit all incident reports no matter how minor to ensure safety and good working relations.

Project Name: _____ Incident Location: _____

Date of Report: _____ Date of Incident: _____

Person in Charge: _____ Time of Incident: _____ **am/pm**

Branch Office Notified ☐ **Yes** ☐ **No** **Safety Coordinator Notified** ☐ **Yes** ☐ **No**

WorkSafe Form Completed: ☐ **Yes** ☐ **No** **WorkSafe Notified:** ☐ **Yes** ☐ **No**

Injuries (person injured)

Name: _____ Date of Birth: (mm/dd/yyyy) _____

Address: _____

Was First Aid Given? ☐ Yes ☐ No By Whom? _____

Was the injured transported to medical aid? ☐ Yes ☐ No By Whom? _____

Where to: _____ Doctor: _____

Description of Incident (What injuries, equipment, tools, materials, etc. were involved? What was the task being done? What happened?

Conditions at time of Incident (weather, status of job, housekeeping, etc.)

Witnesses:

Name: _____ Address: _____ Phone: _____

Name: _____ Address: _____ Phone: _____

Name: _____ Address: _____ Phone: _____

What were the causes of the incident?

Follow-up action:

Submitted by:

Print: Signature: Date (dd/mm/yyyy):

Atlantic Roofers Limited North Shore Roofing Ltd Occupational Health & Safety Program	Date Last Revision: *Jan 2018*	Document No. **S-10-1**
	Title: **Investigation Report**	**Page 1 of 4**

Project Name: _____ Incident Location: _____

Date of Report: _____ Date of Incident: _____

Person in _____ Time of Incident: _____

Provincial Form: ☐ **Yes** ☐ **No** **WorkSafe NB Notified:** ☐ **Yes** ☐ **No**

Person(s) Involved:

Name: _____ Address: _____ Phone: _____

Name: _____ Address: _____ Phone: _____

Name: _____ Address: _____ Phone: _____

Description of Incident (What equipment, tools, materials, etc. were involved? What was the task being done? What happened?

Injuries (person injured)

Name: _____ Date of Birth: (mm/dd/yyyy) _____

Address: _____

Was First Aid Given? ☐ Yes ☐ No By Whom? _____

Was the injured transported to medical aid? ☐ Yes ☐ No By Whom? _____

Where to: _____ Doctor: _____

Conditions at time of Incident (weather, status of job, housekeeping, etc.)

Diagram of Scene – Use attached sheet.

What were the causes of the incident?

Immediate? _____

Underlying? _____

Recommended action(s) to prevent re-occurrence?

Immediate? _____

Long Term? _____

Reason(s) for not implementing corrective action? _____

Person(s) responsible for implementing corrective action(s)?

_____ _____

_____ _____

Target date for Implementation? (mm/dd/yyyy) _____

Signature and Date Completed

Supervisor: _____ Date: (mm/dd/yyyy) _____

Safety Coordinator: _____ Date: (mm/dd/yyyy) _____

Manager: _____ Date: (mm/dd/yyyy) _____

Witnesses:

Name: _____ Address: _____ Phone: _____

Name: _____ Address: _____ Phone: _____

Name: _____ Address: _____ Phone: _____

Follow-up to Corrective Actions:

Corrective Actions Implemented? ☐ Yes ☐ No

Details: _____

Name of person who did follow-up: _____ Date of Follow-up: _____

Signature of person who did follow-up: _____

Draw out the incident scene. Be sure to include the locations of all witnesses, equipment, machinery, buildings, etc. in relation to the incident site.

Please describe the details of your drawing.

Witness Statement

Name of witness:	Date of Incident:
Position:	Contact Information:

Please state in your own words what happened.

Please describe the details of your drawing.

Signature:	Date:

**** Go to the following website to fill out a PDF fillable online form:**

NB - http://www.worksafenb.ca/docs/form67.pdf

NS - http://www.wcb.ns.ca/app/DocRepository/5/Forms/Injury_Report_July_2011_editable1.pdf

PE – http://www.wcb.pe.ca/DocumentManagement/Document/frm_employersreportform7.pdf

NL - http://www.whscc.nf.ca/employers/Emp_ReportingaWorkplaceIncidentorInjury.whscc

10.3 Section 10 Proof of Review

Section / Form	Development			Revised			Reviewed		
	Date		By Whom	Date		By Whom	Date		By Whom
	M	Y		M	Y		M	Y	
10.1	03	05	Br. Mgrs.				01	19	JHSC
10.2	03	05	Br. Mgrs.				01	19	JHSC
F-10-1	01	14	T. Firth				01	19	JHSC
S-10-1	01	14	T. Firth				01	19	JHSC
S-10-2	01	14	T. Firth				01	19	JHSC

118 Cocagne Cross Road
Cocagne, NB E4R 2J2
Tel.: (506) 576-6683 Fax: (506) 576-9714

ENVIRONMENTAL

Section 11

Section 11

Environmental

11.1 Environmental Policy……11.3

11.2 Provincial Environmental Spill Containment Procedures……..11.5

ERP-11-1 Environmental Spill Containment Form……..11.6

S-11-1 Environment Incident Report Form……11.8

11.3 Section 11 Proof of Review……..11.9

118 Cocagne Cross Road
Cocagne, NB E4R 2J2
Tel.: (506) 576-6683 Fax: (506) 576-9714

ENVIRONMENTAL POLICY

Section 11.1

Environmental Policy

Purpose

This Environmental Policy is designed to guide all employees in pursuing their shared responsibility with the company to protect ourselves, the environment, and comply with environmental acts and regulations in all company related work.

Policy

The environment is all external conditions and factors, living and non-living (chemical and energy), that affect an organism or other specified system during its lifetime. The combination of all the social, technological, biological, physical, and chemical elements that compose the surroundings of man is known as the total environment.

Atlantic Roofers Limited/North Shore Roofing Ltd. is committed to protecting human health and the environment through regulatory compliance and the continuous review of our construction operations. We intend to meet this commitment through the application of the following principles.

Responsibilities

Atlantic Roofers Limited/North Shore Roofing Ltd.

1. Continuous evaluation of our construction activities to provide environmental protection in keeping with the highest standards of our industry classification. This shall be a component of all facility/operational hazard assessments.
2. Ensure that all work will be done in an environmentally friendly manner to avoid any harm to the environment.
3. Providing instruction and information to employees as required ensuring an effective communication and reporting system.
4. Selection, use and disposal of materials shall meet the best practices of our industry classification in accordance with the Environment Act and regulations.

Supervisors

1. Ensure that all work will be done in an environmentally friendly manner to avoid any harm to the environment.
2. Minimization of health hazards to employees and public through appropriate measures implemented to eliminate or control hazardous exposures.
3. Assessment of all potential environmental risks associated with all construction activities to be conducted prior to the commencement of work. This shall be a component of all jobsite hazard assessments.

Employees

1. Work and act in an environmentally responsible way when carrying out work for *Atlantic Roofers Limited/North Shore Roofing Ltd.*

.

****The policies and procedures contained within this Health and Safety program do not take precedence over any Occupational Health Safety and/or Environmental legislation in the jurisdiction in which the work is being carried out. All employees and contractors will familiarize themselves with all Provincial, Federal and/or State Occupational Health, Safety and Environmental Acts, Regulations, Policies and other legislative requirements prior to commencing work on any site or project.***

Yves Bradet, General Manager
Atlantic Roofers Limited

Jan 14/19
Date

Terry Casey, General Manager
North Shore Roofing Ltd.

Jan 14/19
Date

118 Cocagne Cross Road
Cocagne, NB E4R 2J2
Tel.: (506) 576-6683 Fax: (506) 576-9714

PROVINCIAL ENVIRONMENTAL SPILL CONTAINMENT PROCEDURES

Section 11.2

The purpose of this procedure is to outline the steps for containment and cleanup of a minor release (leak or spill) that could have an adverse effect on both our employees and the environment.

Containment Procedure

1. Upon discovery of a release, the first employee at the scene shall survey the situation and determine if it is safe to respond.

2. If there is a risk of fire or explosion (e.g.: the material is flammable or combustible):

a) Evacuate persons from the immediate area and **call 911**.
b) Remove all sources of ignition.
c) Ventilate the area

3. If it is safe to continue, wearing personal protective equipment, identify the type and amount and type of material involved (e.g.: 10 litres of liquid adhesive, 15 litres of fuel oil, etc.)

4. If the spill is small, within the control of the first employee at the scene and it is safe to do so:

a) Wear the appropriate personal protective equipment (i.e. gloves, goggles, respirators etc.) based on Material Safety Data Sheet (MSDS) requirements.
b) Ensure the area is well ventilated and stay up wind of the spill area.
c) Stop the flow of the spill or leak by shutting a tap/valve or up-righting the leaking container.
d) Notify the Foreman/Supervisor who will direct the clean-up of the release in accordance with the MSDS protocols.

5. If the spill is beyond the control of the first employee at the scene, immediately:

a) Call the Foreman/Supervisor to action the Spill Response Team.
b) Isolate the area, do not allow anyone not involved in emergency response to enter the area.

6. The Spill Response Team will first survey the scene and assess if they can safely control and contain the release.

7. If control or clean-up of the release is beyond the limits of the equipment or capability of the Spill Response Team, **call 911** and notify the Foreman/Supervisor.

8. If the release can be safely managed by the Spill Response Team:

a) Wear the appropriate personal protective equipment (i.e., gloves, goggles, respirators etc.) based on MSDS requirements.
b) Ensure the area is well ventilated and stay up wind of the spill area.
c) Stop the flow of the spill or leak by shutting a tap/valve or up-righting the leaking container.
d) Attempt to contain the release by placing absorbent socks around spilled material and prevent material from travelling into any drains, storm or sanitary sewers.
e) Use absorbent packs or materials (oil dry/peat moss) to soak up any standing material. Use a scoop or pail to draw up any pooling liquids.
f) Place material being soaked/cleaned up into a drum/container. Include any impacted soil, other material or contaminated clothing with the material that is being removed.
g) Secure and label all drums/containers holding contaminated materials and dispose of at an approved site

9. Should a spill result in any negative physical effect on an employee:

a) Consult the MSDS for proper first aid procedures and implement.
b) Arrange for medical assistance/aid as required.
c) Complete required New Brunswick Work Safe reports.

Reporting Procedure

10. The Spill Response Team Leader will document the release details on the Environmental Incident Report Form (P-11-1).

11. The Foreman/Supervisor will notify the Branch Manager responsible for the job and report details of the incident, within 6 hours of the release.

a) Cocagne NB - Office: 1-506-576-6683 / Mobile: 1-902-628-9564
b) Fredericton NB - Office: 1-506-459-1717 / Mobile: 1-506-444-1844
c) Saint John NB - Office: 1-506-635-7663 / Mobile: 1-506-643-8799
d) Dartmouth NS - Office: 1-902-445-5044 / Mobile: 1-506-850-6776
e) Winsloe PE - Office: 1-902-368-1011 / Mobile: 1-902-628-9564
f) Mount Pearl NL - Office: 1-709-747-4333 / Mobile: 1-709-682-4335
g) Moncton NB – Office: 1-506-576-6683 / Mobile: 1-506-850-6776

12. The Branch Manager will report the release to appropriate Provincial Department of Environment. **All releases, regardless of their size must be reported.**

During regular operating hours call the appropriate Regional Office of the Provincial Department of Environment, to report the release.

▪ Bathurst NB	506-547-2092	▪ NS General Contact	1-877-936-8476
▪ Miramichi NB	506-778-6032		
▪ Moncton NB	506-856-2374	▪ Prince Edward Island	1-902-368-5000
▪ Saint John NB	506-658-2558		
▪ Fredericton NB	506-444-5149	▪ Newfoundland & Labrador	1-709-772-2083
▪ Grand falls NB	506-473-7744		

After normal business hours and on weekends, contact the Canadian Coast Guard at 1-800-565-1633, to report the release.

13. The Branch Manager will report the release to Goguen Champlain Insurance if the response to the release required activation of the Atlantic Roofers' Spill Response Team.

- Goguen Champlain Insurance - 506-862-2070

14. The Branch Manager will contact Goguen Champlain Insurance and the Stantec Site Professional, if the response to the release required resources beyond the Atlantic Roofers' Spill Response Team or if directed by the Insurer or the Department of Environment, or if there is any uncertainty regarding spill clean-up and compliance with Environmental Standards.

- Stantec Consulting Ltd. NB - 506-857-8607
- Stantec Consulting Ltd. NS – 902-468-7777
- Stantec Consulting Ltd. PE – 902-566-2866
- Stantec Consulting Ltd. NL – 709-576-1458

Follow-up

15. The Branch Manager will ensure that all releases are discussed in the Joint Health and Safety Committee meetings.

Atlantic Roofers Limited North Shore Roofing Ltd Occupational Health & Safety Program	Date Last Revision: *Jan 2018*	Document No. **S-11-1**
	Title: **ENVIRONMENTAL INCIDENT REPORT**	**Page 1 of 1**

Project Name: _____ Incident Location: _____

Date of Report: _____ Date of Incident: _____

Person in Charge: _____ Project Managing Branch Office: _____

Name of Product / Substance spilled / released (refer to Material Safety Data Sheet) MSDS:

Exact location of spill (list property grid lines/where exactly on building/property, etc.):

Time Incident started/stopped: Start Time: _____ am/pm Stop Time: _____ am/pm

Weather conditions during clean-up operations (rain/dry/temp, etc.) _____

Briefly describe what was affected by the spill/release (identify surface areas where possible) _____

Briefly describe measures/actions taken to control spill/release (equipment, materials, etc) _____

Identify corrective measures/actions taken to complete the clean-up operation (clean-up, storing contaminants, disposal, etc.)

Recommendation to prevent reoccurrence: _____

Was anyone injured? ☐ Yes ☐ No If yes, attach a copy of the completed Accident/Incident report form to this report.

Who has been contacted:

ARL Branch Manager	☐ Yes	☐ No	Name: _____
ARL Safety Coordinator	☐ Yes	☐ No	Name: _____
Facility/Client Operations Designate	☐ Yes	☐ No	Name: _____
Provincial Environmental Agency	☐ Yes	☐ No	Name: _____
Department of Labour	☐ Yes	☐ No	Name: _____

Report Completed by: _____ _____ _____ am/pm

(print) (signature) Date/Time

11.3 Section 11 Proof of Review

Section / Form	Development			Revised			Reviewed		
	Date		By Whom	Date		By Whom	Date		By Whom
	M	Y		M	Y		M	Y	
11.1	03	05	Br. Mgrs.				01	19	JHSC
11.2	03	05	D. Hall				01	19	JHSC
ERP-11-1	03	05	Br. Mgrs.	04	2018	E Joy	01	19	JHSC
S-11-1	01	14	T. Firth				01	19	JHSC

118 Cocagne Cross Road
Cocagne, NB E4R 2J2
Tel.: (506) 576-6683 Fax: (506) 576-9714

EMERGENCY PREPAREDNESS

Section 12

Section 12

Emergency Preparedness

12.1 Emergency Preparedness Policy……12.3

12.2 Emergency Preparedness Forms……12.6

F-12-1 Emergency Response Orientation……12.7

S-12-1 Emergency Response Drill……12.8

ERP-12-1 Emergency Response Plan – Fire……12.9

ERP-12-2 Emergency Response Plan – Injury or Death……12.10

ERP-12-3 Emergency Response Plan – Transportation of Injured……12.11

ERP-12-4 Post Emergency Process……12.12

ERP-12-5 Emergency Contacts – Cocagne, NB……12.13

ERP-12-6 Emergency Contacts – Fredericton, NB……12.14

ERP-12-7 Emergency Contacts – Saint John, NB……12.15

ERP-12-8 Emergency Contacts – Dartmouth, NS……12.16

ERP-12-9 Emergency Contacts – Winslow, PEI……12.17

ERP-12-10 Emergency Contacts – Mount Pearl, NL……12.18

ERP-12-11 Emergency Contacts – Moncton, NB……12.19

12.3 Section 12 Proof of Review……12.20

118 Cocagne Cross Road
Cocagne, NB E4R 2J2
Tel.: (506) 576-6683 Fax: (506) 576-9714

EMERGENCY PREPAREDNESS POLICY

Section 12.1

Emergency Preparedness Policy

Purpose

To, wherever possible, Protect life and property, Ensure appropriate communication with internal and external parties, Alleviate human suffering and hardship, Maintain and restore essential facilities and services and Ensure continuity of operations.

Policy

The risk of an accident cannot be totally eliminated; therefore *Atlantic Roofers Limited/North Shore Roofing Ltd.* will make every reasonable effort to ensure that each employee is trained and prepared in the event of an emergency.

Responsibilities

Management

1. Provide initial emergency first aid training and refresher training, ensuring the appropriate number of first aid trained individuals at each workplace at all times.
2. Ensure first aid trained personnel are known or their names posted.
3. Provide transportation to a medical facility for injured persons.
4. Provide communications in the form of cellular phones or radios.
5. Provide appropriate first aid kits and ensure that records are kept.

Supervisors

1. Ensure that each first aid trained employee is known to every *Atlantic Roofers Limited/North Shore Roofing Ltd.* employee.
2. Provide first aid to and other emergency services to employees of *Atlantic Roofers Limited/North Shore Roofing Ltd.*, where properly trained to do so.
3. Ensure that proper site orientation is completed and that each employee knows where to find first aid, where the first aid kit is and where the muster station is located.
4. Cooperate with emergency personnel.

Employees

1. Provide first aid and other emergency assistance where properly trained to do so.
2. Cooperate with and follow the instructions of emergency personnel and your supervisor.
3. Participate and cooperate in the Emergency Response Plan drill practice.

JOHSC/Representative

1. Review Emergency Response Plan on an annual basis and make recommendations as required.

Public and Employee Relations

Atlantic Roofers Limited/North Shore Roofing Ltd. understands the importance of developing and maintaining processes that keep the public and employees informed of important developments and newsworthy items regarding all types of emergencies within the Company.

Depending on the severity of the emergency, *Atlantic Roofers Limited/North Shore Roofing Ltd.* will use the following process:

1. *Atlantic Roofers Limited/North Shore Roofing Ltd.* will prepare a preliminary public report, which will be approved by the President prior to being released.
2. Arrangements will be made with a management representative for notification to next of kin in the event of critical injury or fatality to an employee.

3. *Atlantic Roofers Limited/North Shore Roofing Ltd.* will maintain a positive and cooperative relationship between Company Personnel, Subcontractors, the Public, and the Media.

Drills

Drills are required to exercise and maintain the efficiency of personnel in the site-specific rescue and lifesaving techniques. Drills will be conducted on an annual basis, and only when they do not jeopardize the safety of personnel.

Each drill will be documented on a drill report form and assessed by management and corrective actions will be taken when deficiencies are noted. Drill scenarios will vary to provide all personnel the opportunity to utilize all equipment and options, and to ensure they are familiar with all established procedures.

The policies and procedures contained within this Health and Safety program do not take precedence over any Occupational Health Safety and/or Environmental legislation in the jurisdiction in which the work is being carried out. All employees and contractors will familiarize themselves with all Provincial, Federal and/or State Occupational Health, Safety and Environmental Acts, Regulations, Policies and other legislative requirements prior to commencing work on any site or project.

Yves Bradet, General Manager
Atlantic Roofers Limited

Jan 14/19
Date

Terry Casey, General Manager
North Shore Roofing Ltd.

Jan 14/19
Date

118 Cocagne Cross Road
Cocagne, NB E4R 2J2
Tel.: (506) 576-6683 Fax: (506) 576-9714

EMERGENCY PREPAREDNESS FORMS

Section 12.2

Job Site Name: _____ Date: _____

Job Site Location: _____ Supervisor: _____

Review Items (✓ Check off as reviewed)

1st Aid Kit Location ☐ In on-site Vehicle ☐ Roof Work Area ☐ Ground Work Area ☐ _____

Fire Extinguisher Location ☐ In on-site Vehicle ☐ Roof Work Area ☐ Kettle Work Area ☐ _____

Emergency Communications ☐ Cell Phones ☐ Radios ☐ _____

SDS/MSDS Provided ☐ Yes ☐ No ☐ _____

1st Aid Providers _____ _____

Health & Safety Rep. (5 or more crew on site) _____

Muster Point: _____

Site Hazard Assessment Reviewed ☐ Yes Fall Protection Plan Reviewed ☐ Yes

Emergency Contacts

Ambulance: _____ Fire Department: _____ Police: _____

WorkSafe NB 1-888-629-4722 WorkSafe NS 1-800-870-3331 WCB PEI 1-800-237-5049 WHSCC NL & Lab. 1-800-276-5257

General Contractor Rep Office _____ Cell _____

ARL Company Office: _____ ARL Safety Coordinator: 506-381-3975

Hospital Address: _____

Other information as Required

Persons Present

Print Name	Signature	Print Name	Signature

Presented by:

Print Name	Signature	Date (mm/dd/yyyy)

Atlantic Roofers Limited North Shore Roofing Ltd Occupational Health & Safety Program	Date Last Revision: *Jan 2018*	Document No. **S-12-1**
	Title: **Emergency Response Drill**	**Page 1 of 1**

Drill Details

Location	Address	City	Province

Month	Day	Year	Start Time	End Time
			am/pm	am/pm

Type of Drill (✓) Identify and demonstrate appropriate procedure.

- ☐ Fire
- ☐ Transportation of Injured Person
- ☐ First Aid Practice
- ☐ _____
- ☐ Injury or Death
- ☐ Fall Arrest Rescue
- ☐ _____
- ☐ _____

Was this an actual emergency? ☐ **Yes** ☐ **No**

Problems Identified with Emergency Drill

Corrective Actions Taken (Describe below) **Date put into action:** _____

Persons Present (Use back of form if more space needed)

Print Name	Signature	Print Name	Signature

Presented by:

Print Name	Signature	Date (mm/dd/yyyy)

Copies to:

Safety Coordinator	Signature	Date (mm/dd/yyyy)
Branch Manager	Signature	Date (mm/dd/yyyy)
General Manager	Signature	Date (mm/dd/yyyy)

All facility personnel must become familiar with the appropriate Emergency Response Plans for all Departments prior to entering. Visitors to the facility must be instructed on facility Emergency procedures or remain under the direction of ARL personnel familiar with the ERP.
The emergency response plan procedures in the event of Fire are as follows:

1. In case of a fire, warn others: **SHOUT** FIRE – FIRE – FIRE
OR if the <u>Fire Alarm Siren Sounds</u>:

2. **Telephone** 911
Give your Name, Telephone Number, Location and Nature of the Fire or Major Incident (ie; Explosion, Building Collapse, Gas Leak) to the Operator.

3. **Evacuate the area!**
1. All personnel should evacuate the work area as a group.
2. Provide assistance to others, if necessary and if you can do so without increasing the danger to yourself and others.
3. Ensure you close all doors and windows as you exit.

4. **See Floor Plan for Location of Nearest Extinguisher.**
1. If comfortable, attempt to extinguish a small fire.
2. If the fire is/could be out of control, leave the area immediately.
3. Know the location of the nearest Fire Extinguisher.

5. **Meet at Muster Point**
1. Evacuate through the nearest safe Emergency Exit.
2. Move promptly to the general parking area.
3. Gather at _____ where you will be met by the designated Emergency Warden.
4. The designated Emergency Warden shall be _____. (if designate is away from the facility he/she will designate, in advance, a person to act in his/her stead)
5. *You should be at the Muster Point within 2 minutes of exiting the building.*

6. **The Emergency Warden will:**
1. Meet all assembled persons at the Muster Point.
2. Account for all personnel
3. Provide a status report to the Fire Department/EHS personnel upon their arrival of:
   a) The location(s) of all personnel
   b) The fire location
   c) Any known hazards

7. **DO NOT RE-ENTER** the building until the All Clear Signal has been given by the Emergency Warden or Emergency Response Personnel.

8. **Report** ANY <u>use</u> or <u>problems</u> observed with the fire extinguishers to Emergency Warden or the Safety Coordinator.

9. **Fill out the appropriate "Incident Report" F-10-1 and "Investigation Report" F-10-2 if appropriate. (Must be submitted to Branch Office and Safety Coordinator within 24 hours)**

_____	_____	_____
Safety Coordinator Name	Signature	Date (mm/dd/yyyy)

All facility personnel must become familiar with the appropriate Emergency Response Plans for all Departments prior to entering. Visitors to the facility must be instructed on facility Emergency procedures or remain under the direction of ARL personnel familiar with the ERP. The emergency response plan procedures in the event of Injury or Death are as follows:

1. **DO NOT** move seriously injured person(s) unless there is an immediate danger to the injured person's life. **DO NOT** endanger your own life.
If there is any doubt as to the severity of the injury call 911 immediately and request Emergency Response Personnel

2. **Telephone** 911
1. **Location** of emergency (Give Address_____) and WHERE within the facility.
2. **What happened to the injured person.** Describe what you saw or know.

3. **Call for "In-House" First Aid assistance.**
1. See Emergency Contact list on Safety Bulletin Board for First Aiders names and contact phone numbers.

4. **The responding First Aider will become the First Responder for the injured person.**

5. **First Aid Kit Location**
_____

6. **Inform appropriate Provincial WorkSafe. Phone #: _____**

7. **Assign a person to meet and guide Emergency Vehicles/Personnel when they arrive at the facility.**

8. **Nearest Emergency Medical Facility is:**
_____
_____
_____
_____

9. **Fill out the appropriate "Incident Report" F-10-1 and "Investigation Report" F-10-2 if appropriate. (Must be submitted to Branch Office and Safety Coordinator within 24 hours)**

_____	_____	_____
Safety Coordinator Name	Signature	Date (mm/dd/yyyy)

This document outlines basic procedures to follow to ensure any injured/ill person at a company facility is taken care of as effectively and efficiently as possible.

Injury – An act that damages or hurts one's body.
Illness – A disease, period of sickness or unhealthy condition affecting the body or mind.

1. If an injury/illness is discovered, the first person on the scene is to contact an in house First Aider immediately. If the first person determines that the situation is an emergency, he/she is to call **911** then call the in house First Aider.

2. **In all emergency circumstances:**

1. The notified in house/on site First Aider will become the facility First Responder.
2. The in house/on site First Aider/Responder will:
   a) Provide emergency First Aid as required.
   b) Will assess the need for emergency medical intervention and transportation to the nearest medical facility.
3. In all situations the attending First Aider will be responsible for making the call as to what type of transportation is needed.

3. **If the injured/ill person appears to need medical assistance but refuses to be transported by ambulance:**

1. The person listed as the next of kin/emergency contact of the injured party will be contacted and the decision will rest with that person.
2. An injured/ill person whose ability to drive is in doubt, will not be permitted to drive themselves.
3. If , in the opinion of the in house First Aider, an ambulance is not required but is such that the person should be transported to a medical facility, the decision will rest with the First Aider in concert with the injured's next of kin/emergency contact. Injured person will be accompanied by at least one first aid provider who is not the operator of the transportation.

*** Reference to Provincial First Aid Regulations**

NB Regulation 2004-130, Section 6
NL Regulation 1148/96, Sections 11(5)(6)
NS Regulation Section 82, Section 12(1)(2)
PE Regulation Chapter O-1, Section 9

4. **If the injured/ill person needs to be moved from an isolated site to another place for transfer to an ambulance, the transportation is by a means that:**

1. Is suitable, considering the distance to be travelled and the types of serious injuries or illnesses that may occur.
2. Provides for protection against the weather.
3. Is large enough to accommodate a stretcher and a 1st aid person along with the driver.

5. **Transportation Costs**

1. Are incurred as a result of a work related injury/illness those transportation costs will be borne by Atlantic Roofers Limited.
2. Are not related to a work injury/illness any costs of transportation will be borne by the injured/ill person.
3. The injured/ill person is not an employee of Atlantic Roofers Limited, the cost of transportation will be borne by the injured/ill person.

6. **Fill out the appropriate "Incident Report" F-10-1 and "Investigation Report" F-10-2 if appropriate. (Must be submitted to Branch Office and Safety Coordinator within 24 hours)**

Safety Coordinator Name	Signature	Date (mm/dd/yyyy)

Termination of the Emergency Situation is the portion of incident management in which all Management, Subcontractors, and Employees who were involved will document safety procedures, site operations, hazards faced and lessons from the incident. Termination is divided into four phases: Debriefing, Post-incident analysis, Reports and Subsequent Documentation and Clean-up Procedures.

1. **Debriefing** is the process of reviewing the Emergency Situation and focusing on the following factors:

1. Discussion of any potential hazardous exposures.
2. Identifying equipment/material damage and any unsafe conditions.
3. Assigning information-gathering responsibilities.
4. Summarizing the activities performed.

Information provided during the debriefing will be places into the investigation report and provided to Management.

2. **Analysis / Investigation**

During the investigation, the incident will be reconstructed to establish a clear picture of the events that took place during the incident. The post-incident analysis will focus on five key topics:

1. Causes, direct and indirect.
2. Command and control techniques
3. Tactical operations
4. Resources
5. Outside support services.

3. **Reports and Subsequent Documentation**

All reports and other incident documents will be consistent with the Local, Provincial and Federal requirements. The report will consist of the following:

1. The Investigation Report
2. Physical Evidence, Statements, Photographs; and

The Emergency Incident Report will be provided to management of *Atlantic Roofers Limited/North Shore Roofing Ltd.* and Federal or Provincial Authorities.

4. **Clean-up Procedure**

Atlantic Roofers Limited/North Shore Roofing Ltd. will provide a team to perform salvage and recovery clean-up following the investigation procedures.

5. **Fill out the appropriate "Incident Report" F-10-1 and "Investigation Report" F-10-2 if appropriate. (Must be submitted to Branch Office and Safety Coordinator within 24 hours)**

Safety Coordinator Name	Signature	Date (mm/dd/yyyy)

EMERGENCY PHONE NUMBERS:	
FIRE	**911**
AMBULANCE	**911**
POISON CONTROL	**911**
POLICE	**911 or Shediac RCMP 533-5151**
WORKSAFE NB (ACCIDENTS/EMERGENCIES)	**1-800-222-9775**
WORSAFE NB OH&S INSPECTOR	**506-867-0513**
PROPANE UTILITY (IRVING)	**1-506-310-1924**
ELECTRICAL UTILITY (NB POWER)	**1-800-442-4424**
ENVIRONMENTAL EMERGENCIES	**1-800-565-1633**
ATLANTIC ROOFERS LIMITED EMERGENCY CONTACT NUMBERS COCAGNE:	
CIVIC ADDRESS	**118 COCAGNE CROSS ROAD**
SWITCHBOARD	**Tel:506-576-6683 Fax:506-576-9714**
GENERAL MANAGER – Jean Allain	**Cellular #: 506-3773910**
SAFETY COORDINATOR – Erin Joy	**Cellular #: 506-381-3975**

JOINT OCCUPATIONAL HEALTH & SAFETY COMMITTEE (JHSC) MEMBERS:		
EMPLOYER MEMBERS:	**JEAN ALLAIN**	**General Manager – Committee Co-chair**
EMPLOYEE MEMBERS:	**ALYRE ALLAIN**	**Roofing – Moncton Branch**
	CINDY LEBLANC	**Office facility – Committee Co-chair**
	JIM SIGGERS	**Roofing – NS Branch**
	CONRAD GALLANT	**Sheet Metal – Cocagne Branch**
	NICK WOLTERS	**Roofing – Fredericton Branch**
		Roofing – Saint John Branch
	SUSAN GALLANT	**Office – Cocagne Branch**
	ERIN JOY	**Safety Coordinator – Ex-officio Member**
	JOSH SMITH	**Project Management – NFLD Branch**
CERTIFIED FIRST AIDERS:		
	PIERRETTE RICHARD	**Office/Administration**
	DENNIS GOGUEN	**Controller**
	ERIN JOY	**Safety Coordinator**

First Aid kit is located on the shelf, above the laser rotation printer, in the estimating area and Sheet Metal Shop on the wall beside the washroom. Washroom includes an eyewash station.

*** To contact JHSC members, call the switchboard (506-576-6683) and your call will be redirected***

EMERGENCY PHONE NUMBERS:	
FIRE	**911**
AMBULANCE	**911**
POISON CONTROL	**911**
POLICE	**911 or Fredericton RCMP 460-2300**
WORKSAFE NB (ACCIDENTS/EMERGENCIES)	**1-800-222-9775**
WORSAFE NB OH&S INSPECTOR	**506-867-0513**
PROPANE UTILITY (IRVING)	**1-506-310-1924**
ELECTRICAL UTILITY (NB POWER)	**1-800-442-4424**
ENVIRONMENTAL EMERGENCIES	**1-800-565-1633**

ATLANTIC ROOFERS LIMITED EMERGENCY CONTACT NUMBERS COCAGNE:	
CIVIC ADDRESS	**135 PEPIN ROAD**
SWITCHBOARD	**Tel:506-576-6683 Fax:506-576-9714**
GENERAL MANAGER – Jean Allain	**Cellular #: 506-377-3910**
SAFETY COORDINATOR –Erin Joy	**Cellular #: 506-381-3975**

JOINT OCCUPATIONAL HEALTH & SAFETY COMMITTEE (JHSC) MEMBERS:		
EMPLOYER MEMBERS:	**JEAN ALLAIN**	**General Manager – Committee Co-chair**
EMPLOYEE MEMBERS:	**ALYRE ALLAIN**	**Roofing – PEI Branch**
	CINDY LEBLANC	**Office facility – Committee Co-chair**
	JIM SIGGERS	**Roofing – NS Branch**
	CONRAD GALLANT	**Sheet Metal – Cocagne Branch**
	NICK WOLTERS	**Roofing – Fredericton Branch**
		Roofing – Saint John Branch
	SUSAN GALLANT	**Office – Cocagne Branch**
	ERIN JOY	**Safety Coordinator – Ex-officio Member**
	JOSH SMITH	**Project Management – NFLD Branch**

CERTIFIED FIRST AIDERS:
ALL EMPLOYEES

First Aid kit is located _____

_____

*** To contact JHSC members, call the switchboard (506-576-6683) and your call will be redirected***

EMERGENCY PHONE NUMBERS:	
FIRE	**911**
AMBULANCE	**911**
POISON CONTROL	**911**
POLICE	**911 or Saint John RCMP 648-3333**
WORKSAFE NB (ACCIDENTS/EMERGENCIES)	**1-800-222-9775**
WORSAFE NB OH&S INSPECTOR	**506-867-0513**
PROPANE UTILITY (IRVING)	**1-506-310-1924**
ELECTRICAL UTILITY (NB POWER)	**1-800-442-4424**
ENVIRONMENTAL EMERGENCIES	**1-800-565-1633**

ATLANTIC ROOFERS LIMITED EMERGENCY CONTACT NUMBERS COCAGNE:	
CIVIC ADDRESS	**39 HATHEWAY CRESCENT**
SWITCHBOARD	**Tel:506-576-6683 Fax:506-576-9714**
GENERAL MANAGER – Jean Allain	**Cellular #: 506-377-3910**
SAFETY COORDINATOR – Erin Joy	**Cellular #: 506-381-3975**

JOINT OCCUPATIONAL HEALTH & SAFETY COMMITTEE (JHSC) MEMBERS:		
EMPLOYER MEMBERS:	**JEAN ALLAIN**	**General Manager – Committee Co-chair**
EMPLOYEE MEMBERS:	**ALYRE ALLAIN**	**Roofing – PEI Branch**
	CINDY LEBLANC	**Office facility – Committee Co-chair**
	JIM SIGGERS	**Roofing – NS Branch**
	CONRAD GALLANT	**Sheet Metal – Cocagne Branch**
	NICK WOLTERS	**Roofing – Fredericton Branch**
		Roofing – Saint John Branch
	SUSAN GALLANT	**Office – Cocagne Branch**
	ERIN JOY	**Safety Coordinator – Ex-officio Member**
	JOSH SMITH	**Project Management – NFLD Branch**

CERTIFIED FIRST AIDERS:	
	Roofer
CHELSEY NELSON	**Estimator**

First Aid kit is located _____
_____

*** To contact JHSC members, call the switchboard (506-576-6683) and your call will be redirected***

EMERGENCY PHONE NUMBERS:	
FIRE	**911**
AMBULANCE	**911**
POISON CONTROL	**911**
POLICE	**911 or Enfield RCMP 883-7077**
WORKSAFE NS (ACCIDENTS/EMERGENCIES)	**1-800-870-3331**
WORSAFE NS OH&S INSPECTOR	**902-491-8999**
PROPANE UTILITY (IRVING)	**1-506-310-1924**
ELECTRICAL UTILITY (NS POWER)	**1-800-428-6230**
ENVIRONMENTAL EMERGENCIES	**1-800-565-1633**

ATLANTIC ROOFERS LIMITED EMERGENCY CONTACT NUMBERS COCAGNE:	
CIVIC ADDRESS	**192 JOSEPH ZATZMAN DR, UNIT A/B**
SWITCHBOARD	**Tel:506-576-6683 Fax:506-576-9714**
GENERAL MANAGER – Jean Allain	**Cellular #: 506-377-3910**
SAFETY COORDINATOR – Erin Joy	**Cellular #: 506-381-3975**

JOINT OCCUPATIONAL HEALTH & SAFETY COMMITTEE (JHSC) MEMBERS:		
EMPLOYER MEMBERS:	**JEAN ALLAIN**	**General Manager – Committee Co-chair**
EMPLOYEE MEMBERS:	**ALYRE ALLAIN**	**Roofing – PEI Branch**
	CINDY LEBLANC	**Office facility – Committee Co-chair**
	JIM SIGGERS	**Roofing – NS Branch**
	CONRAD GALLANT	**Sheet Metal – Cocagne Branch**
	NICK WOLTERS	**Roofing – Fredericton Branch**
		Roofing – Saint John Branch
	SUSAN GALLANT	**Office – Cocagne Branch**
	ERIN JOY	**Safety Coordinator – Ex-officio Member**
	JOSH SMITH	**Project Management – NFLD Branch**

CERTIFIED FIRST AIDERS:	
JEREMY CROFT	**Branch Manager**
JIM SIGGERS	**Roofer**

First Aid kit is located _____

_____

*** To contact JHSC members, call the switchboard (506-576-6683) and your call will be redirected***

EMERGENCY PHONE NUMBERS:	
FIRE	**911**
AMBULANCE	**911**
POISON CONTROL	**911**
POLICE	**911 or Charlottetown RCMP 629-4172**
WORKSAFE PE (ACCIDENTS/EMERGENCIES)	**1-800-237-5049**
WORSAFE PE OH&S INSPECTOR	**902-368-5680**
PROPANE UTILITY (EMERGNCY MEASURES)	**1-902-894-0385**
ELECTRICAL UTILITY (MARITIME ELECTRIC)	**1-800-670-1012**
ENVIRONMENTAL EMERGENCIES	**1-800-565-1633**

ATLANTIC ROOFERS LIMITED EMERGENCY CONTACT NUMBERS COCAGNE:	
CIVIC ADDRESS	**314 SOUTH WINSLOE ROAD**
SWITCHBOARD	**Tel:506-576-6683 Fax:506-576-9714**
GENERAL MANAGER – Jean Allain	**Cellular #: 506-377-3910**
SAFETY COORDINATOR – Erin Joy	**Cellular #: 506-381-3975**

JOINT OCCUPATIONAL HEALTH & SAFETY COMMITTEE (JHSC) MEMBERS:		
EMPLOYER MEMBERS:	**JEAN ALLAIN**	**General Manager – Committee Co-chair**
EMPLOYEE MEMBERS:	**ALYRE ALLAIN**	**Roofing – PEI Branch**
	CINDY LEBLANC	**Office facility – Committee Co-chair**
	JIM SIGGERS	**Roofing – NS Branch**
	CONRAD GALLANT	**Sheet Metal – Cocagne Branch**
	NICK WOLTERS	**Roofing – Fredericton Branch**
		Roofing – Saint John Branch
	SUSAN GALLANT	**Office – Cocagne Branch**
	ERIN JOY	**Safety Coordinator – Ex-officio Member**
	JOSH SMITH	**Project Management – NFLD Branch**

CERTIFIED FIRST AIDERS:	
TIM MCCARTHY	**Estimator**

First Aid kit is located _____
_____

*** To contact JHSC members, call the switchboard (506-576-6683) and your call will be redirected***

EMERGENCY PHONE NUMBERS:	
FIRE	911
AMBULANCE	911
POISON CONTROL	911
POLICE	911 or Mount Pearl RCMP 229-3892
WORKSAFE NL (ACCIDENTS/EMERGENCIES)	1-709-729-4444
WORSAFE NL OH&S INSPECTOR	1-709-729-2706
PROPANE UTILITY (EMERGNCY MEASURES)	1-709-729-3703
ELECTRICAL UTILITY (HYDRO)	1-888-764-9376
ENVIRONMENTAL EMERGENCIES	1-800-563-9089

ATLANTIC ROOFERS LIMITED EMERGENCY CONTACT NUMBERS COCAGNE:	
CIVIC ADDRESS	89 BREMIGENS BLVD
SWITCHBOARD	Tel:506-576-6683 Fax:506-576-9714
GENERAL MANAGER – Terry Casey	Cellular #: 729-682-4335
SAFETY COORDINATOR – Travis White	Cellular #: 729-682-4663
SAFETY COORDINATOR – Erin Joy	Cellular #: 506-381-3975

JOINT OCCUPATIONAL HEALTH & SAFETY COMMITTEE (JHSC) MEMBERS:		
EMPLOYER MEMBERS:	JEAN ALLAIN	General Manager – Committee Co-chair
EMPLOYEE MEMBERS:	ALYRE ALLAIN	Roofing – PEI Branch
	CINDY LEBLANC	Office facility – Committee Co-chair
	JIM SIGGERS	Roofing – NS Branch
	CONRAD GALLANT	Sheet Metal – Cocagne Branch
	NICK WOLTERS	Roofing – Fredericton Branch
		Roofing – Saint John Branch
	SUSAN GALLANT	Office – Cocagne Branch
	ERIN JOY	Safety Coordinator – Ex-officio Member
	JOSH SMITH	Project Management – NFLD Branch

CERTIFIED FIRST AIDERS:	
ANDREW DAWE	Project Manager

First Aid kit is located _____
_____

*** To contact JHSC members, call the switchboard (506-576-6683) and your call will be redirected***

EMERGENCY PHONE NUMBERS:	
FIRE	911
AMBULANCE	911
POISON CONTROL	911
POLICE	911 or Mount Pearl RCMP 229-3892
WORKSAFE NL (ACCIDENTS/EMERGENCIES)	1-709-729-4444
WORSAFE NL OH&S INSPECTOR	1-709-729-2706
PROPANE UTILITY (EMERGNCY MEASURES)	1-709-729-3703
ELECTRICAL UTILITY (HYDRO)	1-888-764-9376
ENVIRONMENTAL EMERGENCIES	1-800-563-9089

ATLANTIC ROOFERS LIMITED EMERGENCY CONTACT NUMBERS COCAGNE:	
CIVIC ADDRESS	275 BAIG GLVD
SWITCHBOARD	Tel:506-576-6683 Fax:506-576-9714
GENERAL MANAGER – Jean Allain	Cellular #: 506-377-3910
SAFETY COORDINATOR – Erin Joy	Cellular #: 506-381-3975

JOINT OCCUPATIONAL HEALTH & SAFETY COMMITTEE (JHSC) MEMBERS:		
EMPLOYER MEMBERS:	JEAN ALLAIN	General Manager – Committee Co-chair
EMPLOYEE MEMBERS:	ALYRE ALLAIN	Roofing – PEI Branch
	CINDY LEBLANC	Office facility – Committee Co-chair
	JIM SIGGERS	Roofing – NS Branch
	CONRAD GALLANT	Sheet Metal – Cocagne Branch
	NICK WOLTERS	Roofing – Fredericton Branch
		Roofing – Saint John Branch
	SUSAN GALLANT	Office – Cocagne Branch
	ERIN JOY	Safety Coordinator – Ex-officio Member
	JOSH SMITH	Project Management – NFLD Branch

CERTIFIED FIRST AIDERS:

First Aid kit is located _____

_____

*** To contact JHSC members, call the switchboard (506-576-6683) and your call will be redirected***

12.3 Section 12 Proof of Review

Section / Form	Development			Revised			Reviewed		
	Date		By Whom	Date		By Whom	Date		By Whom
	M	Y		M	Y		M	Y	
12.1	03	05	Br. Mgrs.				01	19	JHSC
12.2	03	05	Br. Mgrs.				01	19	JHSC
F-12-1	03	05	Br. Mgrs.				01	19	JHSC
S-12-1	03	05	Br. Mgrs.	01	2019	E Joy	01	19	JHSC
ERP-12-1	03	05	Br. Mgrs.	01	2019	E Joy	01	19	JHSC
ERP-12-2	03	05	Br. Mgrs.	01	2019	E Joy	01	19	JHSC
ERP-12-3	03	05	Br. Mgrs.	01	2019	E Joy	01	19	JHSC
ERP-12-4	03	05	Br. Mgrs.	01	2019	E Joy	01	19	JHSC
ERP-12-5	03	05	Br. Mgrs.	01	2019	E Joy	01	19	JHSC
ERP-12-6	03	05	Br. Mgrs.	01	2019	E Joy	01	19	JHSC
ERP-12-7	03	05	Br. Mgrs.	01	2019	E Joy	01	19	JHSC
ERP-12-8	03	05	Br. Mgrs.	01	2019	E Joy	01	19	JHSC
ERP-12-9	03	05	Br. Mgrs.	01	2019	E Joy	01	19	JHSC
ERP-12-10	03	05	Br. Mgrs.	01	2019	E Joy	01	19	JHSC
ERP-12-11	03	05	Br. Mgrs.	01	2019	E Joy	01	19	JHSC

118 Cocagne Cross Road
Cocagne, NB E4R 2J2
Tel.: (506) 576-6683 Fax: (506) 576-9714

RECORDS AND STATISTICS

Section 13

Section 13

Records and Statistics

13.1 Records and Statistics Policy……..13.3

13.2 Summary Forms……13.5

P-13-1 Monthly Safety Summary……13.6

S-13-1 Yearly Safety Summary by Branch……..13.7

13.3 Section 13 Proof of Review……..13.9

118 Cocagne Cross Road
Cocagne, NB E4R 2J2
Tel.: (506) 576-6683 Fax: (506) 576-9714

RECORDS AND STATISTICS POLICY

Section 13.1

Records and Statistics Policy

Purpose

Records, reports and statistics serve the purpose of documenting a "live" and healthy health and safety program, and thus provide the means by which management and the JOHSC/Representative can monitor the effectiveness of the program. Records and statistics can demonstrate due diligence on the part of *Atlantic Roofers Limited/North Shore Roofing Ltd*. and can be used to identify trends and problems and to allow planning for program improvements.

Policy

In accordance with the Occupational Health and Safety Act and the health and safety policy of *Atlantic Roofers Limited/North Shore Roofing Ltd*., management shall ensure records and statistics are maintained and preserved for a minimum period of five years.

To ensure that management and employees have the required information at hand when needed, all health and safety documentation will be maintained in a central filing system at each division.

The following records shall be maintained:

- JOHSC records – minutes, inspections, investigations, recommendations, etc
- Hazard Assessments
- Incident Reports and Investigations
- Workplace Inspections
- Training Records
- Inventory of Hazardous Materials
- First Aid Treatment Records
- New Employee Orientations
- Emergency Drills
- Government Inspection Reports
- Safety Violations and Resulting Discipline/Corrections
- Maintenance Records
- Minutes of Toolbox Meetings
- WCB Reports
- Emergency Drill Reports

Year-end safety reports and any other statistics required by the JOHSC/ Representative will be submitted by the deadline set by the committee.

Management will perform annual audits of the safety program for the continuous improvement of our program.

****The policies and procedures contained within this Health and Safety program do not take precedence over any Occupational Health Safety and/or Environmental legislation in the jurisdiction in which the work is being carried out. All employees and contractors will familiarize themselves with all Provincial, Federal and/or State Occupational Health, Safety and Environmental Acts, Regulations, Policies and other legislative requirements prior to commencing work on any site or project.***

Yves Bradet, General Manager
Atlantic Roofers Limited

Jan 14/19
Date

Terry Casey, General Manager
North Shore Roofing Ltd.

Jan 14/19
Date

118 Cocagne Cross Road
Cocagne, NB E4R 2J2
Tel.: (506) 576-6683 Fax: (506) 576-9714

SUMMARY FORMS

Section 13.2

Atlantic Roofers Limited North Shore Roofing Ltd Occupational Health & Safety Program	Date Last Revision: *Jan 2018*	Document No. **P-13-1**
	Title: **Monthly Safety Summary**	**Page 1 of 1**

Branch: _____ **Month:** _____ **Year:** _____

1. Number of Workers Hired: _____
2. Number of Completed Orientations: _____
3. Number of Tool Box Meetings Scheduled: _____
4. Percentage of Attendance: _____
5. Number of Formal Inspections Conducted: _____
6. No. of Unsafe Acts/Conditions Identified: _____
7. No. of Unsafe Acts/Conditions Corrected: _____
8. Ave # Employees: _____
9. Ave # Employee Work Hours: _____
10. Number of Fatalities: _____
11. # Lost Workday/Lost Time Incidents: _____
    (Doctor's note specifies # of Days Off)
12. # of Days Away From Work: _____
    (Beyond the Day of Incident)
13. # Modified/Restricted Duty Incidents: _____
14. Number of Medical Treatment Incidents: _____
    (Seen by Doctor - No Lost Time/Restrictions)
15. 1st Aid Incidents: (NOT seen by Doctor) _____
16. # of Near Misses: (No Injury/Damage) _____
17. # of Incidents: (Damage Only) _____
18. # Incident Investigations Completed: _____
19. # of Recommendations Made: _____
20. # of Recommendations Completed:
21. # of Vehicle Accidents: _____
22. Total Kilometers Driven: _____
23. # of Employees that completed a Training Course: _____

Nature of Injury	✓	**# of Injuries**
Head Injury	☐	
Eye Injury	☐	
Neck Injury	☐	
Shoulder Injury	☐	
Back Injury	☐	
Rib Injury	☐	
Arm Injury	☐	
Elbow Injury	☐	
Wrist Injury	☐	
Hand Injury	☐	
Leg Injury	☐	
Knee Injury	☐	
Ankle Injury	☐	
Foot Injury	☐	
Foot Crush	☐	
Foot Bruise	☐	
Hernia	☐	
Fractures (except hand & foot)	☐	
Burns	☐	
Infections/Chemical Exposure	☐	

Suggestions Arising from Tool Box Meetings:

a. _____
b. _____
c. _____
d. _____

Completed by (Print) _____ Sign: _____ Date: _____

Branch Manager (Print) _____ Sign: _____ Date: _____

Safety Coordinator _____ Sign: _____ Date: _____

		Cocagne	Fredericton	Saint John	Dartmouth	Winsloe	Mount Pearl	Total
1.	Number of Workers Hired:							
2.	Number of Completed Orientations:							
3.	Number of Tool Box Meetings Scheduled:							
4.	Percentage of Attendance:							
5.	Number of Formal Inspections Conducted:							
6.	No. of Unsafe Acts/Conditions Identified:							
7.	No. of Unsafe Acts/Conditions Corrected:							
8.	Ave # Employees:							
9.	Ave # Employee Work Hours:							
10.	Number of Fatalities:							
11.	# Lost Workday/Lost Time Incidents:							
	(Doctor's note specifies # of Days Off)							
12.	# of Days Away From Work:							
	(Beyond the Day of Incident)							
13.	# Modified/Restricted Duty Incidents:							
14.	Number of Medical Treatment Incidents:							
	(Seen by Doctor - No Lost Time/Restrictions)							
15.	1st Aid Incidents: (NOT seen by Doctor)							
16.	# of Near Misses: (No Injury/Damage)							
17.	# of Incidents: (Damage Only)							
18.	# Incident Investigations Completed:							
19.	# of Recommendations Made:							
20.	# of Recommendations Completed:							
21.	# of Vehicle Accidents:							
22.	Total Kilometers Driven:							
23.	# of Employees that Completed a Training Course:							

	Cocagne	Fredericton	Saint John	Dartmouth	Winsloe	Mount Pearl	Total
Nature of Injury							
Head Injury							
Eye Injury							
Neck Injury							
Shoulder Injury							
Back Injury							
Rib Injury							
Arm Injury							
Elbow Injury							
Wrist Injury							
Hand Injury							
Leg Injury							
Knee Injury							
Ankle Injury							
Foot Injury							
Foot Crush							
Foot Bruise							
Hernia							
Fractures (except hand & foot)							
Burns							
Infections/Chemical Exposure							

General Manager (Print) Sign: Date:

Safety Coordinator (Print) Sign: Date:

13.3 Section 13 Proof of Review

Section / Form	Development			Revised			Reviewed		
	Date		By Whom	Date		By Whom	Date		By Whom
	M	Y		M	Y		M	Y	
13.1	03	05	Br. Mgrs.				01	19	JHSC
13.2	03	05	Br. Mgrs.				01	19	JHSC
P-13-1	01	14	T. Firth				01	19	JHSC
S-13-1	01	14	T. Firth				01	19	JHSC

118 Cocagne Cross Road
Cocagne, NB E4R 2J2
Tel.: (506) 576-6683 Fax: (506) 576-9714

HR POLICIES

Section 14

Section 14

HR Policies

14.1 Cell Phone Policy……14.3

14.2 Drug and Alcohol Policy……14.6

P-14-1 Reasonable Grounds Testing Form……14.9

P-14-2 Post Incident Testing Form……14.11

P-14-3 Alcohol and Drug Testing Consent Form……14.12

P-14-4 Alcohol and Drug Testing – Information Release Form……14.13

P-14-5 Employee Assistance – Program Referral Form……14.14

Referral Assistance Contacts Form……14.15

14.3 Marijuana Policies……14.16

Medical Marijuana Policy……14.17

Recreational Marijuana Policy……14.19

14.4 Ergonomic Policy……14.21

14.5 Harassment Policy……14.23

14.6 Modified Duty Policy……14.26

M-14-1 Letter to Employees Physician Form……14.29

M-14-2 Treatment from Physician Form……14.30

M-14-3 Offer of Modified Work Form……14.32

M-14-4 Employee Progress Evaluation Form……14.33

P-14-5 ESRTW Evaluation Form……14.34

14.7 Personal Hygiene Policy……14.35

14.8 Prevention of Workplace Violence Policy……14.37

14.9 Section 14 Proof of Review……14.39

118 Cocagne Cross Road
Cocagne, NB E4R 2J2
Tel.: (506) 576-6683 Fax: (506) 576-9714

CELL PHONE POLICY

Section 14.1

Cell Phone Policy

Purpose

This policy outlines the use of personal and company issued cell phone devices (this includes: smart phones -eg: I Phones; Android phones and personal digital assistants, Blackberry devices, etc.) while at work.

Policy

While at work, employees of *Atlantic Roofers Limited/North Shore Roofing Ltd.* are to exercise discretion in using all cellular devices.

Personal Calls/Texting

Personal calls/Texting during the workday can interfere with employee productivity and is a distraction both to the person receiving/sending the call or text and to others working in the area.

It is well documented in research studies that worker distraction is a major contributor to workplace accidents, further to this, research findings indicate that cell phone use/texting while working or driving is dangerous and may even approach the equivalent danger of performing while under the influence of drugs or alcohol.

The importing of explicit ,derogatory or offensive materials into the workplace via cell phones devices will not be tolerated by *Atlantic Roofers Limited/North Shore Roofing Ltd.* and will be enforced up to and including removing the individual importing this material from the workplace.

Atlantic Roofers Limited/North Shore Roofing Ltd. encourages a reasonable standard of limiting calls/text messages to break and lunch times when on shift and when not in control of a vehicle or equipment unless a hands free device is used to perform the call.

Employees are therefore asked to make all personal calls on non-work time and ensure family and friends are made aware of this policy. **Personal calls from family/friends should be directed through your local branch office switchboard, where the receptionist will redirect the call through to your foreman's cell phone.**

Flexibility will be provided to this policy in circumstances demanding immediate attention. (Emergencies only).

Lost, Stolen or Damaged Personal devices

Atlantic Roofers Limited/North Shore Roofing Ltd. will not be responsible for lost, stolen or damaged personal cell phones brought into the workplace by employees.

Use of Cellular Devices While Driving

Employees whose job responsibilities include regular or occasional driving and who are issued/using a cell phone for business use are expected to refrain from using their phone while driving. Safety must come before other concerns.

Employees are expected to pull off to the side of the road and safely stop the vehicle before accepting or placing a call.

If acceptance of a call is unavoidable, and pulling over is not an option, employees are expected to do <u>all</u> of the following:

1. Use hands free options as required by law.
2. Refrain from engaging in complicated or emotional discussions and <u>always</u> keep your eyes on the road.

In situations where job responsibilities include regular driving and accepting of business calls, hands-free equipment will be provided to facilitate the provisions of this policy.

Under no circumstances does *Atlantic Roofers Limited/North Shore Roofing Ltd.* expect or allow employees to place themselves or others at risk to fulfill their job duties or business needs.

Employees who are charged with traffic violations resulting from the use of their cell phones while driving will be solely responsible for all liabilities that result from such actions.

Enforcement of Policy

The terms of this policy will be enforced under the direction of the Regional Branch Manager/Director and executed by Supervisors/Foremen as per *Atlantic Roofers Limited/North Shore Roofing Ltd.* *Company Rules and Discipline Policy*, in that, on observance of contravention of this policy the following enforcement measures will occur:

1. **First offence** a verbal warning will be issued by their immediate supervisor/Foreman.
2. **Second offence** a written warning will be issued.
3. **Third offence** will result in a suspension from work without pay and/or probable termination of employment.

As also stated in our *Company Rules and Discipline Policy* individuals will be dismissed without prior notice if their actions are deemed to pose an immediate risk to themselves, co-workers and/or *Atlantic Roofers Limited/ North Shore Roofing Ltd.*

****The policies and procedures contained within this Health and Safety program do not take precedence over any Occupational Health Safety and/or Environmental legislation in the jurisdiction in which the work is being carried out. All employees and contractors will familiarize themselves with all Provincial, Federal and/or State Occupational Health, Safety and Environmental Acts, Regulations, Policies and other legislative requirements prior to commencing work on any site or project.***

Yves Bradet, General Manager
Atlantic Roofers Limited

Jan 14/19
Date

Terry Casey, General Manager
North Shore Roofing Ltd.

Jan 14/19
Date

118 Cocagne Cross Road
Cocagne, NB E4R 2J2
Tel.: (506) 576-6683 Fax: (506) 576-9714

DRUG & ALCOHOL POLICY

Section 14.2

Drug and Alcohol Policy

Purpose

Atlantic Group of Companies (Atlantic Roofers Limited, North Shore Roofing Ltd, and Atlantic Metaclad) is committed to being an industry leader in providing outstanding value to its customers, a safe and stimulating work environment for its employees, and superior returns for its shareholders. This policy is written to ensure we keep that commitment.

Policy

Recognizing the potential negative effects of alcohol and drugs on the organization, in particular the hazards that those individuals who abuse alcohol and/or drugs pose to themselves, their co-workers, and the general public, Atlantic Group of Companies has implemented a drug and alcohol policy.

Drug and alcohol abuse is not acceptable in the workplace. Atlantic Group of Companies acknowledges its obligation to take all reasonable steps to ensure the health and safety of its workers.

This policy provides for the testing of employees for drug/alcohol abuse, assisting employees who voluntarily seek help for problems relating to alcohol and/or drugs (cannabis or any illegal drug), and educating employees on the dangers of drug and alcohol abuse.

The Drug and Alcohol Policy applies to all employees of the Atlantic Group of Companies and may also extend to subcontractors.

For the purpose of this policy, the following are prohibited:

1. Being impaired by alcohol/drugs (cannabis or any illegal drug) while at work
2. The possession or use of any illicit drug or alcohol on Company premises, at Company worksites, or in Company vehicles.
3. The presence in the body of illicit drugs (or their metabolites) while at work
4. Refusal to submit to drug/alcohol testing, failure to report to a Company-designated facility for a drug/alcohol test, or tampering or attempting to tamper with a test sample.

Disciplinary Action

Employees who violate the provisions of this policy are subject to disciplinary action up to and including termination of employment.

Work Rules Governing Drug/Alcohol Abuse

1. Employees are not to report to work or be at work if they are impaired by alcohol or drugs
2. An employee who is taking legal medication (whether or not prescribed by a physician) which may affect or impair judgement, co-ordination or perception so as to adversely affect their ability to perform work in a safe and productive manner, must notify their supervisor prior to commencing work. The supervisor will determine whether the employee will be permitted to work or whether work restrictions will be applied.
3. Employees who are not capable of competently and safely performing their job duties will not be permitted to work an will be required to leave the Company premises/job site.
4. When an employee, considered to be in an unfit condition, is required to leave Company premises, transportation to their residence will be arranged by the supervisor.

The Company reserves the right to temporarily remove, reassign or suspend and employee pending a determination of the employee's fitness for work, assessment of a drug/alcohol problem, or completion of an investigation into a possible violation of this policy.

Drug and Alcohol Testing

In the interest of safety and the objective of ensuring a work environment free of impairment by drug/alcohol, employees are required to submit to tests for drugs and/or alcohol for contractor request prior to starting a project or when there is just cause. Such tests may include but limited to: breath analysis, urinalysis, or any other test(s) considered appropriate.

The Atlantic Group of Companies will not accept test results from any other facility other than one designated by the Company.

If there is reasonable cause to believe that an employee is in violation of this policy, Atlantic Group of Companies may require the employee to submit to alcohol/drug testing and/or physical testing of motor skills and reactions.

Reasonable cause shall mean observation of impaired motor skill proficiency, impaired judgement, or unusual conduct, or any reliable information provided to the Company of drug/alcohol consumption at work or an inappropriately short time prior to reporting to work.

Following an incident or near miss the Atlantic Group of Companies may require those involved to undergo testing for drugs/alcohol.

Responsibilities

Management

1. Provide information on drug and alcohol abuse
2. Enforce this policy
3. Help those suffering from addiction, to find treatment

Supervisor

1. Do not allow a person under the influence to work
2. Immediately report drug and alcohol abuse
3. Follow confidentiality protocols

Employees

1. Do not work when under the influence
2. Report to supervisor, any use of drugs and/or alcohol that may be in your system while at work

****The policies and procedures contained within this Health and Safety program do not take precedence over any Occupational Health Safety and/or Environmental legislation in the jurisdiction in which the work is being carried out. All employees and contractors will familiarize themselves with all Provincial, Federal and/or State Occupational Health, Safety and Environmental Acts, Regulations, Policies and other legislative requirements prior to commencing work on any site or project.***

Yves Bradet, General Manager
Atlantic Roofers Limited

Jan 14/19
Date

Terry Casey, General Manager
North Shore Roofing Ltd.

Jan 14/19
Date

Employee Name:	**Date(dd/mm/yyyy)**	**Time:**	**am/pm**

Step 1 **Definition of Reasonable Grounds**

Use this form if you feel there are fair and sensible factors based on observation of an Employee's conduct or other indicators that the employee is or may not be able to work in a safe manner because of the use of alcohol or drugs.

Note: If the employee has been involved in an incident (accident, near miss, or incident), use the Post Incident A&D Testing Form.

Step 2 **Determine if Reasonable Grounds Exist**

Please refer to the Reasonable Grounds Considerations Table below.

Please check category(s) that apply.

☐ Physical Evidence ☐ Physical Symptoms ☐ Behavioral Symptoms ☐ Other _____

Please describe specific evidence, symptoms, or behavior used to determine reasonable grounds for A&D testing.

_____

_____

Reasonable Grounds Considerations - This list is provided to assist in determining whether reasonable grounds exist for A&D testing.

Physical Evidence

- ☐ Odor of marijuana *(like burnt rope)* in room or on clothing
- ☐ Incense or room deodorizers
- ☐ Eye drops, mouthwash
- ☐ Marijuana cigarettes *(rolled and twisted at each end)*
- ☐ Powders, seeds, leaves, plants, mushrooms
- ☐ Capsules or tablets
- ☐ Pipes, pipe filters, screens, strainers
- ☐ "Roach" clips (metal clips to hold the butt of the marijuana joint)
- ☐ "Bongs", water pipes (usually glass or plastic)
- ☐ Small spoons, straws, razor blades, mirrors(for use with cocaine)
- ☐ Stash cans (soft drink, beer and other cans that unscrew)
- ☐ Unfamiliar small containers or locked boxes
- ☐ Drug-related; books, magazines, comics
- ☐ Presence of alcohol, drugs or drug paraphernalia

Physical Symptoms

- ☐ Acting intoxicated
- ☐ Alcohol smell
- ☐ Bloodshot or red eyes, droopy eyelids
- ☐ Imprecise eye movement
- ☐ Abnormally pale complexion
- ☐ Change in speech patterns and vocabulary patterns
- ☐ Neglect of personal appearance, grooming
- ☐ Unexplained weight loss or loss of appetite
- ☐ Smell of mouthwash

Behavioral Symptoms

- ☐ Unexplained periods of depression, anxiety or irritability
- ☐ Strongly inappropriate overreaction to mild criticism
- ☐ Decreased interaction and communication with others
- ☐ Preoccupation with self, less concern for the feelings of others
- ☐ Loss of motivation and enthusiasm / Poor quality work
- ☐ Lethargy, lack of energy and vitality
- ☐ Loss of ability to assume responsibility
- ☐ Absenteeism record - Tardiness
- ☐ Change in reliability –neglect, missing deadlines
- ☐ Unexplainable reason why an event occurred
- ☐ Failure to attend scheduled safety meetings/tool box talks
- ☐ especially at the start and end of shift
- Non-compliance to safety standards
- ☐ Change in demeanor such as threatening or withdrawal
- ☐ Unauthorized entry into a work area

Other

- Advised by credible 3rd party that an employee is a drug user
- ☐ Advised by room-mate that drug paraphernalia was found in room
- ☐ Observed using alcohol or drugs on site by a co-worker
- ☐ Post-incident investigation was not able to rule out A&D use
- ☐ Advised by credible 3rd party that A&D use is occurring on site
- ☐ Direct observation of employees conduct
- ☐ Caused or contributed to an accident, near miss/dangerous occurrence
- ☐ Un-witnessed incidents

Personal and Confidential

Employee Name:	**Date(dd/mm/yyyy)**	**Time:** **am/pm**
Step 3 Final Determination and Approval ☐ A&D Testing is required	☐ A&D Testing is not required	
Supervisor (print)	Signature	Date (mm/dd/yyyy)
Branch Manager (print)	Signature	Date (mm/dd/yyyy)
Job Steward (Where Applicable)	Signature	Date (mm/dd/yyyy)
Labour Relations (Where Applicable)	Signature	Date (mm/dd/yyyy)

Employee Name: _____ **Weather Conditions** _____

Date of Incident (dd/mm/yyyy) _____ **Time of Incident:** _____ **am/pm**

Date of Investigation (dd/mm/yyyy) **Time of Investigation:**

Step 1 **Review the requirements for Alcohol & Drug testing of employees involved in an incident.**

A supervisor of an employee **MUST** complete the Post Incident Testing Form as part of the Reasonable Grounds investigation for each employee involved in an accident, near miss, or incident. "Involvement" in an incident is not limited to injured parties.

The employee may be requested to submit to an alcohol and drug test based on the Reasonable Grounds investigation. The supervisor and the next level of management may determine that there are reasonable grounds to require or to waive A&D testing.

Note: This form is for use in Post Incident situations. For situations where A&D use is suspected outside of an incident, use the Reasonable Grounds Testing Form. (Form F-14-1)

Step 2 **Determine if there are Grounds to Require or to Waive an A&D Test**

If the A&D testing requirement is being waived, please ✓ YES or NO and explain the reason below.

☐ Yes ☐ No Act of God e.g. wind, weather
☐ Yes ☐ No Victim of another person's actions
☐ Yes ☐ No Clear mechanical breakdown
☐ Yes ☐ No Innocent bystander
☐ Yes ☐ No Victim of an operational upset
☐ Yes ☐ No Other: Specify _____

Please explain the reason A&D testing is being waived.

_____
_____
_____

Please explain the reason A&D testing is being required.

_____
_____
_____

Step 3 **Final Determination and Approval**

☐ A&D Testing is required ☐ A&D Testing is not required

Supervisor (print)	Signature	Date (mm/dd/yyyy)
Branch Manager (print)	Signature	Date (mm/dd/yyyy)
Job Steward (Where Applicable)	Signature	Date (mm/dd/yyyy)
Labour Relations (Where Applicable)	Signature	Date (mm/dd/yyyy)

Personal and Confidential

Employee Name:	**Date(dd/mm/yyyy)**

I, _____ authorize _____ to obtain a breath, urine, or saliva sample from me to determine its alcohol and drug content.

I understand that the result will be used in evaluating my physical condition and I authorize release of these findings to a Medical Review Officer and the Senior Management of *Atlantic Roofers Limited/North Shore Roofing Limited*.

I understand Atlantic Roofers Limited/North Shore Roofing Limited's Alcohol &Drug Policy.

I have taken the following medication (prescription or over the counter) in the past two-week period:

_____

_____

_____

Employee (print)	Signature	Date (mm/dd/yyyy)
Witness (print)	Signature	Date (mm/dd/yyyy)

Personal and Confidential

Employee Name: **Date(dd/mm/yyyy)**

I, _____ hereby give permission to release information in regard to alcohol and drug testing to the following company and company representative.

Company Name (print) _____

Company Rep. (print) _____

Company Rep. Job Title: _____

Date of Test: _____

Comments:

_____

_____

_____

_____

Employee (print)	Signature	Date (mm/dd/yyyy)
Witness (print)	Signature	Date (mm/dd/yyyy)

Note: All medical information obtained will be kept in strictest confidence and will not be released to anyone not specified by the employee.

Personal and Confidential

Employee Name: **Date(dd/mm/yyyy)**

Employee Referral to (name of treatment agency): _____

Address: _____

Phone: _____ Fax: _____

Referring Party: _____

Address: _____

Phone: _____ Fax: _____

Purpose of Referral: ☐ Information ☐ Assessment ☐ Treatment

List factors and details indicating need for referral:

_____

_____

_____

_____

Is a report required? ☐ Yes ☐ No If Yes: ☐ Written ☐ Verbal

Referring Party (print)	Signature	Date (mm/dd/yyyy)

Employee Referral Assistance Contacts

New Brunswick Addiction Centers

Location	**Address**	**Telephone**
Bathurst	350 St George St.	(506) 547-2086
Campbellton	53 Gallant Dr.	(506) 789-7055
Edmunston	62 Queen St.	(506) 735-2092
Fredericton	65 Brunswick St.	(506) 452-5558
Miramichi	1780 Water St.	(506) 778-6111
Moncton	81 Albert St.	(506) 856-2333
Saint John	416 Bay St. South Bay	(506) 674-4300
Tracadie-Sheila	400 Hospitalières St.	(506) 394-3615

Newfoundland & Labrador 1-877-777-4386

Nova Scotia Addiction Centers

Annapolis Valley		1-877-365-1735
Cape Breton		(902) 567-7913
Capital Health - Halifax		1-866-340-6700
Colchester East Hants - Elmsdale	15 Commerce Court, Suite #250	(902) 883-0295
Cumberland – Truro	600 Abenaki Rd.	(902) 893-5526
Guysborough Antigonish Strait		1-888-291-3535
IWK Health Center		(902) 470-8888
Pictou County – New Glasgow	690 East River Rd.	(902) 755-7017
South Shore		1-888-429-8167
South West	Soldiers Memorial Hospital – Middleton, NS	(902) 825-6828

Prince Edward Island Addiction Centers 1-888-299-8399

Blue Cross Employee Assistance Program	www.myinconfidence.ca	1-877-418-2181

118 Cocagne Cross Road
Cocagne, NB E4R 2J2
Tel.: (506) 576-6683 Fax: (506) 576-9714

MARIJUANA POLICY

Section 14.3

Medical Marijuana Policy

Purpose

The purpose of this policy is to set up guidelines and expectations when it comes to using medical marijuana. Medical marijuana will be treated the same as all other regularly prescribed medication. Atlantic Group of Companies (Atlantic Roofers Limited, North Shore Roofing Ltd., and Atlantic Metalcad) has the same expectations from employees who use medical marijuana as who use all other types of medication and will accommodate individuals up to the point of undue hardship.

Guidelines

- Employees may only use medical marijuana with a license in their names from a physician.
- If an employee is required to use medical marijuana while at work, they must inform the Regional Manager. An employee is not required to disclose their specific medical diagnosis; however, they are required to provide a note from their doctor and a copy of the possession license.
- All information provided in regard to medical marijuana use is considered confidential and will be treated as such, keeping an employee's privacy as a top concern second only to safety.
- Employees who have a medical condition which requires additional accommodation can discuss their marijuana use schedule in context of the general accommodation plan with their Regional Manager and their primary care physicians.
- Employees may be required to work with the company's service provider who will provide direction and support for the use of medical marijuana.
- Atlantic Group of Companies will work with the individual that requests accommodation in an effort to ensure that the measures taken are both effective and mutually agreeable.
- In the event that medical marijuana is deemed to pose a significant or potential hazard to the employee and/or other employees, Atlantic Group of Companies will attempt to find alternative work for the employee, up to the point of undue hardship.

Use of Medical Marijuana While at Work

- In the even that an employee is taking medical marijuana during regular working hours, they are expected to use it in moderation, only at the recommended level of dosage and the applicable frequency of the dose.
- Atlantic Group of Companies asks that, where possible, employees who require medical marijuana use a method of ingestion other than smoking
- Employees who choose to smoke medical marijuana must abide by all provincial smoking regulations
- Employees who choose to smoke medical marijuana are not permitted to smoke in the presence of other employees
- Atlantic Group of Companies will determine an appropriate smoking area for the employee, with the goal of maintaining the confidentiality of the employee's medical situation.

Roles and Responsibilities

Management is required to:

- Treat employees who use medical marijuana the same as all other employees using prescription medication
- Provide accommodation up to the point of undue hardship.
- Be aware of the effects of marijuana use and ensure employees are not placed in any safety sensitive situations
- Assess the effects of the use of marijuana on an employee's performance on the job
- Ensure that any employee who asks for help due to a drug or alcohol dependency is provided with the appropriate support (including accommodation) and is not disciplined for doing so.

- Respond to any employee who queries regarding the use of medical marijuana, while maintaining the privacy of an employee's specific situation at all times.

Employees are required to:

- Disclose their medical marijuana use to management
- Work with Atlantic Group of Companies to develop accommodation plans that are mutually agreeable
- Follow the agreed-upon accommodation plan and the guidelines of this policy
- Never share their medication with any other employee, even those who may have a similar prescription
- Maintain ongoing communication with management regarding the effects of marijuana on their ability to perform their duties
- Never participate in activities which could cause a safety risk, such as driving while under the influence of marijuana.

Yves Bradet, General Manager
Atlantic Roofers Limited

Jan 14/19
Date

Terry Casey, General Manager
North Shore Roofing Ltd.

Jan 14/19
Date

Recreational Marijuana Policy

Purpose

The purpose of this policy is to set up guidelines and expectations when it comes to using recreational marijuana.

Marijuana will be treated the same as all other recreational substances. Atlantic Group of Companies (Atlantic Roofers Limited, North Shore Roofing Ltd, Atlantic Metaclad) has adopted this policy to communicate its expectations and guidelines surrounding marijuana use, misuse and abuse.

Guidelines

Employees under the influence of drugs or alcohol on the job can pose serious health and safety risks both to themselves and their coworkers. To help ensure a safe and healthy workplace, Atlantic Group of Companies reserves the rights to prohibit certain items and substances from being brought onto, or present on company premises.

Expectations

The following expectations apply to employees and managements alike while conducting work on behalf of the company, whether on or off company property:

- Employees are expected to arrive to work fit for duty and able to perform their duties safely. Employees must remain fit for duty for the duration of their shift
- Employees will be expected to not have smoked within 8 hours of starting their shift.
- Use, possession, distribution or sale of drugs or alcohol during work hours, including during paid and unpaid breaks, is strictly prohibited
- Employees are prohibited from reporting to work while under the influence of recreational marijuana and any other non-prescribes substances
- Employees on medically approved medication must communicate to management any potential risk, limitation, or restriction requiring modification of duties or temporary reassignment
- Employees are expected to abide by all governing legislation pertaining to the possession and use of marijuana.

Roles and Responsibilities

Atlantic Group of Companies will clearly communicate all expectations surrounding marijuana use, misuse and abuse. To help enforce this policy, management and employees are expected to adhere to the following:

Management will:

- Identify any situations that may cause concern regarding an employee's ability to safely perform their job functions
- Ensure that any employee who asks for help due to a drug or alcohol dependency is provided with the appropriate support (including accommodation)
- Maintain confidentiality and employee privacy.

Employees must:

- Arrive for work fit for duty, and remain fit for duty throughout their shift
- Perform work safely in accordance with company established safe work practices
- Avoid the consumption, possession, sale or distribution of marijuana, other drugs or alcohol on company property, and during working hours even if off company property
- When off duty, refuse a request to come into work if unfit for duty
- Report limitations and required modifications as a result of medically approved marijuana use
- Report unfit coworkers to management
- Seek advise or appropriate treatment where required

- Communicate dependency or emerging dependency
- Abide by all governing legislation pertaining to the possession and use of marijuana

Medical Marijuana

Where an employee uses medical marijuana, it is expected they provide a copy of their medical license to use marijuana to your Regional Manager at Atlantic Group of Companies.

Disciplinary Action

Employees found in violation of this policy may be subjected to disciplinary action up to and including dismissal of employment. Where applicable, Atlantic Group of Companies will take legal action in accordance with the law.

Yves Bradet, General Manager
Atlantic Roofers Limited

Jan 14/19
Date

Terry Casey, General Manager
North Shore Roofing Ltd.

Jan 14/19
Date

118 Cocagne Cross Road
Cocagne, NB E4R 2J2
Tel.: (506) 576-6683 Fax: (506) 576-9714

ERGONOMIC POLICY

Section 14.4

Ergonomic Policy

Purpose

The purpose of an Ergonomic policy is to establish guidelines to ensure that all possible safeguards are taken to protect our employees from injuries by identifying risks associated with manual handling, posture and work station layout in our work environment and moving to eliminate or reduce these risks.

Policy

Atlantic Roofers Limited/North Shore Roofing Ltd. is committed to ensuring that Ergonomics are included in our workplace health and safety objectives.

In accordance with provisions outlined in applicable provincial Workers Compensation guidelines and industry best practices, *Atlantic Roofers Limited/North Shore Roofing Ltd.* shall:

1. Recognize that any employee may express his/her concern to their direct supervisor/foreman, or the JHSC for the work area in question.
2. Address Ergonomic issues through discussion between the employee, supervisor/foreman, and if required the JHSC for the work area in question.
3. Instruct all employees to consider ergonomic aspects of specific duties.
4. Provide reasonable and suitable ergonomic aids, where required to enhance the safe and ergonomic aspects of work performance.
5. Include ergonomic issues as an integral part of our annual facilities hazard assessment.

The policies and procedures contained within this Health and Safety program do not take precedence over any Occupational Health Safety and/or Environmental legislation in the jurisdiction in which the work is being carried out. All employees and contractors will familiarize themselves with all Provincial, Federal and/or State Occupational Health, Safety and Environmental Acts, Regulations, Policies and other legislative requirements prior to commencing work on any site or project.

Yves Bradet, General Manager
Atlantic Roofers Limited

Jan 14/19
Date

Terry Casey, General Manager
North Shore Roofing Ltd.

Jan 14/19
Date

118 Cocagne Cross Road
Cocagne, NB E4R 2J2
Tel.: (506) 576-6683 Fax: (506) 576-9714

HARASSMENT POLICY

Section 14.5

Harassment Policy

Purpose

The purpose of this policy is to assist in developing a working environment in which harassment & bullying are known to be unacceptable and where individuals have the confidence to bring forward their concerns about harassment & bullying, should it arise, in the knowledge that their concerns will be dealt with appropriately and fairly.

Policy

Atlantic Roofers Limited/North Shore Roofing Ltd. in cooperation with our employees is committed to maintaining a healthy environment, that is free from harassment, intimidation, threats and violent acts.. *Atlantic Roofers Limited/North Shore Roofing Ltd.* has developed a companywide policy intended to prevent harassment of its employees and to deal quickly and effectively with any incident that might occur. Harassment will not be ignored, condoned or tolerated.

Definition of Harassment

Harassment is an unwelcome physical, visual or verbal conduct. It is against the law. Harassment may include verbal or practical jokes, insults, threats, personal comments or innuendo. It may take the form of posters, pictures or graffiti. It may involve touching, stroking, pinching or any unwelcome physical contact. Any behavior that insults or intimidates is harassment if a reasonable person should have known that the behavior was unwelcome.

The Human Rights Code protects everyone within provincial jurisdiction from harassment and other forms of discrimination of the basis of race, religion, sex (including pregnancy and sexual orientation), marital status, physical disability, political opinion, color of ethnic, national or social origin and age (in employment only, between the ages of nineteen and sixty-five).

Even the smallest amount of harassment in the workplace can affect morale, productivity, and profitability.
All incidents of this type will be held in the strictest confidence and dealt with in a concerned and respectful manner.

Reporting Process

When an employee identifies they have become a victim of harassment, the following action should be taken:

1. In an assertive manner, the complainant should make his/her unequivocal disapproval known to the offender immediately. Keep a written record of offenses including dates and nature of behavior and name of witnesses (if any). Inform the offender that this behavior is being documented.
2. The complainant should notify their Supervisor if the above actions do not stop the offender's behavior.
3. If the complainant does not wish to discuss their allegation with their supervisor for any reason, the complainant can alternatively contact Atlantic Roofers/North Shore Roofing, senior management.

You also have a right to file a complaint with your provincial Human Rights Commission within six months of the last incident.

Resolution

The complaint of harassment will be treated confidentially at the most appropriate level of management. The seriousness and effects of the offense will be discussed with the offender. Disciplinary action will be taken without repercussions to the complainant.

Training

Ongoing training and education will be provided to all employees through information brochures and formal training as it is appropriate for our operations.

Emergencies

For immediate assistance in an emergency (assault, direct threat of violence, suicide attempt, weapons, and robbery) or any crime in progress, dial 9-1-1.

Reporting a situation that you are uncomfortable with

Contact your immediate Supervisor, Branch Manager or Atlantic Roofers/North Shore Limited General Manager to provide the details of what you witnessed or experienced. All information given will be recorded and an investigation will be conducted.

****The policies and procedures contained within this Health and Safety program do not take precedence over any Occupational Health Safety and/or Environmental legislation in the jurisdiction in which the work is being carried out. All employees and contractors will familiarize themselves with all Provincial, Federal and/or State Occupational Health, Safety and Environmental Acts, Regulations, Policies and other legislative requirements prior to commencing work on any site or project.***

Yves Bradet, General Manager
Atlantic Roofers Limited

Jan 14/19
Date

Terry Casey, General Manager
North Shore Roofing Ltd.

Jan 14/19
Date

118 Cocagne Cross Road
Cocagne, NB E4R 2J2
Tel.: (506) 576-6683 Fax: (506) 576-9714

MODIFIED DUTY POLICY

Section 14.6

Modified Duty Policy

Purpose

The purpose of a modified duty program enables *Atlantic Roofers Limited/North Shore Roofing Ltd.* to promote a timely return to work for its injured employees.

Modified duties are based upon the promise that injured workers want to return to their jobs. This policy is intended to assist the injured workers make a speedy recovery and accomplish a successful return to work. Employers and employees will meet on an annual basis to discuss the program.

Policy

Worker's Compensation describes Modified Work as any job, task, function or combination of tasks or functions that a worker, who suffers from a diminished capacity, temporary or permanent partial disability, may perform, safely and for compensation, without risk of re-injury or aggravation of disability or risk to another, which in total, would not have been performed by that worker.

Atlantic Roofers Limited/North Shore Roofing Ltd. recognizes the obligation as stated in legislation, to offer re-employment to employees injured at work. In addition *Atlantic Roofers Limited/North Shore Roofing Ltd*. feels a moral obligation to try and provide re-employment to our injured workers. The approach benefits both the Employer and the Employee as follows:

Employee Benefits

1. Financial impact on employee is reduced as an employee is earning full wages instead of being paid a fraction of his normal wages while on benefits.
2. Research shows the longer an injured worker is off work due to an injury, the less likely it is that they will return to work. Injured workers who are off work for more than one year only have a 25% chance of returning to the workforce while those off for two years or more have a 1% chance.

Employer Benefits

1. Reduces loss of production.
2. Assessment costs are reduced due to employees being back to work instead of being home on benefits.
3. Reduces retraining costs associated with a replacement work.

Modified Duty Program

The Modified Duty Program will be implemented using one of two methods:

1. **Gradual Return** - If a worker can safely return to work but is unable to resume full duties, they can take part in a gradual return program. This program allows the worker to build up the number of hours worked gradually and the injured worker gradually takes on increasingly demanding tasks. The gradual return program will be assessed on a case by case basis, but most will take from two to eight weeks. Health care treatment may continue during this period.

1. **Modified Work Duties** - The tasks performed by a worker while on a Modified Duty Program could include their pre-accident duties or different duties. The method of return to work will be approved in consultation with the WHSCC, injured worker, the employer, the attending physician and/or any health care providers and the union, if applicable. The only requirement is that the duties do not aggravate the injury. The Light/Modified Work Program will be assessed on a case by case basis, but most will take from two to twelve weeks. After twelve weeks if the employee is unable to return to full duties, he/she will be directed to their treating health care provider for additional medical directions.

Both programs can be initiated within days of an injury depending upon its nature. With each of these approaches, it is important to try and get the worker back to work. It is essential that this work be rewarding and of value not only to the worker, but to the employee. It may be necessary to modify the jobsite while the worker is recovering or permanently if the worker is unable to resume all of their functions after they have fully recovered.

Modified Work

- May include regular work that has been changed, redesigned or physically modified.
- May consist of reductions in time or volume of work performed.
- May be work that is normally performed by others.
- May be work that has been specifically designed or designated for a worker participating in a modified work program.
- Must be productive, and the results of the work must have value.

Supervisor's Responsibilities

1. Supervisors have a responsibility to determine what modified work positions are available within their job sites.
2. Supervisors must cooperate fully in the implementation of the program.
3. Supervisors must provide both meaningful and productive work to the worker. When offering the injured worker a specific job, us the "Offer of Modified Work Form".
4. The modified work program must be applied consistently, fairly and equally to all participants.
5. The supervisor must work with the employee to set realistic goals and expectations.
6. Supervisors must consider other workers when placing injured worker in modified work positions.
7. Supervisors must monitor the worker's progress using the "Employee Progress Evaluation form". Each case will determine the frequency.
8. Workers MUST NOT return to regular duties without the doctor's consent in writing.

Worker's Responsibilities

1. If a worker suffers personal injury by an accident, regardless of whether he/she is injured, seeks medical aid, then the worker shall, as soon as possible, after the accident, give notice to the supervisor and/or Manager of *Atlantic Roofers Limited/North Shore Roofing Ltd.*
2. Before or after going to a physician, the worker must receive "Letter to the Physician and the Treatment Form" from his/her supervisor or designate.
3. Employees have a moral obligation to return to the workplace when able to do so.
4. Employees will abide by the restrictions outlined by the physician and will not deviate from such restrictions.
5. Workers must notify his/her supervisor or designate of any additional doctor's visits.

****The policies and procedures contained within this Health and Safety program do not take precedence over any Occupational Health Safety and/or Environmental legislation in the jurisdiction in which the work is being carried out. All employees and contractors will familiarize themselves with all Provincial, Federal and/or State Occupational Health, Safety and Environmental Acts, Regulations, Policies and other legislative requirements prior to commencing work on any site or project.***

Yves Bradet, General Manager
Atlantic Roofers Limited

Jan 14/19
Date

Terry Casey, General Manager
North Shore Roofing Ltd.

Jan 14/19
Date

Date: _____

Dear Dr. _____ ,

_____ Is employed with Atlantic Roofers Limited/North Shore Roofing Ltd.
(Employee's Name)

as _____ .
(Job Title)

In accordance to Workers' Compensation and Atlantic Roofers Limited/North Shore Roofing Ltd. "Modified Duty Program" policies, the Company has developed a Modified Work Program that will allow for an employee's early return to suitable work following most injuries or illness, while taking into consideration any medical restrictions that may exist.

To assist us, please indicate on the attached forms:

- ☐ Whether this employee is medically fit, fit with restrictions, or unfit for return to work.
- ☐ An estimated return to work date.
- ☐ Any job restrictions you may feel are necessary.
- ☐ Recommended date when these restrictions should be reviewed.

Should you have any questions regarding this employee's job demands, our modified program, or the completion of this form, please contact _____ at _____ .

Thank you for your participation in helping make our rehabilitation program a success.

Yours truly,

_____
Atlantic Roofers Limited/North Shore Roofing Ltd. Representative

Office Use:

Name of Patient: _____

Health Card Number: _____ **Date:** _____

Normal Job Duties:

General Labour duties including: Maintaining housekeeping, loading /unloading trucks & palletized materials/tool/equipment and set up of work areas. Cutting materials to size for tradesmen using a knife. Applying paints/primers to surfaces using paint brushes/ Rollers. Use of small hand/power tools (hammers/drills etc).

Note: Job functions vary from job to job, depending on the description of work (ie: larger jobs vs. a small maintenance job) therefore the demands of the job may vary as well. Duties as described are a general analysis of work analyzing the maximum demands of work that _____ is exposed to given his experience on the job.
(Name of Patient)

Physician to Complete

In my opinion, the employee has:

- ☐ A work related injury
- ☐ A recurrence of a previous injury
- ☐ A condition not related to work injury
- ☐ Uncertain because _____

Having examined this patient, I have determined that this employee is:

- ☐ Fit for regular duties
- ☐ Fit for modified duties commencing on _____ (mm/dd/yyyy) until _____ (mm/dd/yyyy).

  (please complete work restrictions, if applicable, on Page 2 of this form)
- ☐ Unfit for regular duties

  Reason: _____

  _____

  Estimated return to work date: _____ (mm/dd/yyyy)

This employee:

- ☐ Will not require additional visits
- ☐ Will require additional visits

_____	_____	_____
Physician (print)	Signature	Date (mm/dd/yyyy)

Office Use:

Name of Patient: _____

Health Card Number: _____ **Date:** _____

Physician to Complete – Work Restrictions

Strength – Lifting, carrying, pulling or pushing objects to a maximum of:

- ☐ 5kg. ☐ 10 kg. ☐ 20 kg.
- ☐ Minimize firm right-handed grip
- ☐ Avoid firm right-handed grip
- ☐ Minimize firm left-handed grip
- ☐ Avoid firm left-handed grip
- ☐ NO strength restrictions

Safety and Balancing

- ☐ Avoid bending or twisting the torso
- ☐ Avoid kneeling or crawling
- ☐ Avoid overhead or above-shoulder work
- ☐ Minimize neck flexion to _____ min/hour or _____ hours/day
- ☐ Minimize forward reaching to _____ min/hour or _____ hours/day
- ☐ Minimize wrist flexion/extension/deviations to _____ times/hour
- ☐ Restrict standing or walking to _____ hours/day
- ☐ Provide frequent changes between standing, sitting, and walking
- ☐ NO posture or tasks restrictions

Environmental Factors

- ☐ Avoid working in extreme temperatures
- ☐ Avoid working with vibrating hand tools
- ☐ NO environmental restrictions

Other Medical Restrictions (Please print for legibility reasons)

_____

_____

_____

To: _____ Date: _____
(Injured Employee) (mm/dd/yyyy)

Your physician or health care provider has released you for modified work. We have located a position for you which will match the restrictions set out by your health care provider. You will commence on

_____ _____ _____ and will continue for approximately
(month) (day) (year)

the next _____ days/weeks.

Your job will be as follows:

_____

_____

_____

The modified job duties will be done over a scheduled _____ hour shift. There will be NO overtime permitted without approval of the reporting Branch Manager while on this program.

Your work will be limited to the following restrictions as set out by your health care provider:

_____

_____

_____

Safe work practices must be observed at all times and we would like to reaffirm that working safely is a condition of returning to work.

☐ I accept this offer of modified work.

☐ I reject this offer of modified work. (Provide written reasons for rejecting offer)

_____	_____	_____
Employee (print)	Signature	Date (mm/dd/yyyy)
_____	_____	_____
Management (print)	Signature	Date (mm/dd/yyyy)

Employee Name: _____ **Branch/Department:** _____

Supervisor/Foreman: _____ **Date Started:** _____

Job Being Performed: _____ **Date Ended:** _____

Date:	**WEEK: 1**
Supervisor Comments/Observations:	Worker Comments:

Date:	**WEEK: 2**
Supervisor Comments/Observations:	Worker Comments:

Date:	**WEEK: 3**
Supervisor Comments/Observations:	Worker Comments:

Date:	**WEEK: 4**
Supervisor Comments/Observations:	Worker Comments:

Date:	**WEEK: 5**
Supervisor Comments/Observations:	Worker Comments:

Management Review by: (print)	Signature	Date (mm/dd/yyyy)

To be distributed and completed by <u>all employees</u>.

Employee Name: _____ **Date(dd/mm/yyyy)** _____

1.	Are you aware of the Company's Injury Reporting System?	YES ☐	NO ☐
2.	Are you aware of the procedures to follow in the event of an injury?	YES ☐	NO ☐
3.	Do you know who you must contact in the event of an injury?	YES ☐	NO ☐
4.	Are you are of the Company's Early and Safe Return to Work Program?	YES ☐	NO ☐
5.	Do you know your obligations under the Early and Safe Return to Work Program?	YES ☐	NO ☐
6.	Are you aware of the Company's obligations under the Early and Safe Return to Work Program?	YES ☐	NO ☐
7.	Are you aware that the Early and Safe Return to Work Program is reviewed and evaluated on an annual basis?	YES ☐	NO ☐

Comments and/or Suggestions:

_____

_____

_____

_____

_____

To be distributed and completed by those employees who have <u>participated in the Early and Safe Return to Work Program.</u>

1.	Were you provided with a Form 6 - WHSCC'S Worker's Report of Injury?	YES ☐	NO ☐
2.	Did you return the Form 8/10 - WHSCC's Physician's Report of Injury to the Company?	YES ☐	NO ☐
3.	Did the Company review the Form 8/10 with you and discuss noted limitations/restrictions?	YES ☐	NO ☐
4.	Were you offered modified duties?	YES ☐	NO ☐
5.	Did the Company maintain communication with you during the return to work process?	YES ☐	NO ☐
6.	If any issues arose during return to work planning were they dealt with promptly and fairly?	YES ☐	NO ☐

Comments and/or Suggestions:

_____

_____

_____

_____

_____

118 Cocagne Cross Road
Cocagne, NB E4R 2J2
Tel.: (506) 576-6683 Fax: (506) 576-9714

PERSONAL HYGIENE POLICY

Section 14.7

Personal Hygiene Policy

Purpose

Atlantic Roofers Limited/North Shore Roofing Ltd. requires all employees to present themselves in a professional manner, with regard to attire, personal hygiene and appearance. These standards are in keeping with our organizational practices of appropriate business conduct, professionalism, dress code and safety.

Policy

Proper hygiene can help to prevent the spread of disease and in some cases; poor hygiene can be a safety hazard. Atlantic Insulated Wall Panels Inc. employees are expected to meet hygiene requirements during regular business hours and/or while sharing hotel rooms or vehicles with coworkers, for the duration of their employment.

1. Maintain personal cleanliness by bathing daily.
2. Oral hygiene (brushing of teeth) required.
3. Use deodorant / anti-perspirant to minimize body odors.
4. No heavily scented perfumes, colognes and lotions. These can cause allergic reactions, migraines and respiratory difficulty for some employees.
5. Clean and trimmed fingernails.
6. Wash hands after eating, or using the restrooms.
7. Clothing must be clean, in good condition and fit appropriately.
8. Secured long hair (hair must be tied back to prevent potential for being caught in equipment).
9. Clothing must not interfere with the safe operation of equipment.
10. Limited jewelry and no dangling or large jewelry that may create a safety hazard to self or others.
11. Tattoos that are perceived as offensive, hostile or that diminish the effectiveness of the employee's professionalism must be covered, and not visible.

****The policies and procedures contained within this Health and Safety program do not take precedence over any Occupational Health Safety and/or Environmental legislation in the jurisdiction in which the work is being carried out. All employees and contractors will familiarize themselves with all Provincial, Federal and/or State Occupational Health, Safety and Environmental Acts, Regulations, Policies and other legislative requirements prior to commencing work on any site or project.***

Yves Bradet, General Manager
Atlantic Roofers Limited

Jan 14/19
Date

Terry Casey, General Manager
North Shore Roofing Ltd.

Jan 14/19
Date

118 Cocagne Cross Road
Cocagne, NB E4R 2J2
Tel.: (506) 576-6683 Fax: (506) 576-9714

PREVENTION OF WORKPLACE VIOLENCE POLICY

Section 14.8

Prevention of Workplace Violence Policy

Purpose

Atlantic Roofers Limited/North Shore Roofing Ltd. maintains a zero tolerance standard of violence in the workplace. The purpose of this policy is to provide *Atlantic Roofers Limited/North Shore Roofing Ltd.* employees guidance that will maintain an environment at and within *Atlantic Roofers Limited/North Shore Roofing Ltd* property and events that is free of violence and the threat of violence.

Policy

The management of *Atlantic Roofers Limited/North Shore Roofing Ltd.* recognizes the potential for workplace violence and other aggressive behavior directed at our employees. We will not tolerate behavior from anyone that intimidates, threatens, harasses, abuses, injures or otherwise victimizes our employees and will take whatever steps are appropriate to protect our employees from the potential hazards associated with workplace violence. We are committed to providing our employees with an appropriate level of protection from the hazards associated with workplace violence.

Management Responsibilities

1. Inform employees if they are working in an area where there is a potential for violence and identify any risks that are specific to that area.
2. Ensure that appropriate procedures are in place to minimize the risk to our employees from violence.
3. Ensure that employees are trained in recognizing and responding to situations involving workplace violence.
4. Ensure that every reported incident of workplace violence is investigated and potential areas for improvement are identified.

Employee Responsibilities

1. Employees of *Atlantic Roofers Limited/North Shore Roofing Ltd.* are required to be familiar with and follow the procedures that are in place to protect them from workplace violence.
2. All employees must participate in the instruction of workplace violence prevention.
3. Employees are required to immediately report all incidents of workplace violence to their supervisor or foreman.
4. Employees are also responsible for participating in work site hazard assessments and implementing controls and procedures to eliminate or control the associated hazards.

No employee will be penalized, reprimanded or in any way criticized when acting in good faith while following the procedures for addressing situations involving workplace violence

****The policies and procedures contained within this Health and Safety program do not take precedence over any Occupational Health Safety and/or Environmental legislation in the jurisdiction in which the work is being carried out. All employees and contractors will familiarize themselves with all Provincial, Federal and/or State Occupational Health, Safety and Environmental Acts, Regulations, Policies and other legislative requirements prior to commencing work on any site or project.***

Yves Bradet, General Manager
Atlantic Roofers Limited

Jan 14/19
Date

Terry Casey, General Manager
North Shore Roofing Ltd.

Jan 14/19
Date

14.9 Section 14 Proof of Review

Section	Development			Revised			Reviewed		
	Date		By Whom	Date		By Whom	Date		By Whom
	M	Y		M	Y		M	Y	
14.1	03	05	Br. Mgrs.	05	2018	E Joy	01	19	JHSC
14.2	03	05	Br. Mgrs.	04	2018	E Joy	01	19	JHSC
P-14-1	01	14	T. Firth				01	19	JHSC
P-14-2	01	14	T. Firth				01	19	JHSC
P-14-3	01	14	T. Firth				01	19	JHSC
P-14-4	01	14	T. Firth				01	19	JHSC
P-14-5	01	14	T. Firth				01	19	JHSC
14.3	09	18	E Joy				01	19	JHSC
14.4	03	05	Br. Mgrs.				01	19	JHSC
14.5	03	05	Br. Mgrs.				01	19	JHSC
14.6	03	05	Br. Mgrs.				01	19	JHSC
M-14-1	03	05	Br. Mgrs.				01	19	JHSC
M-14-2	03	05	Br. Mgrs.				01	19	JHSC
M-14-3	03	05	Br. Mgrs.				01	19	JHSC
M-14-4	03	05	Br. Mgrs.				01	19	JHSC
14.7	01	14	T. Firth				01	19	JHSC
14.8	01	14	T. Firth				01	19	JHSC

118 Cocagne Cross Road
Cocagne, NB E4R 2J2
Tel.: (506) 576-6683 Fax: (506) 576-9714

LEGISLATION AND REFERENCE

Section 15

Section 15

Legislation and Reference

15.1 Legislation and Reference……15.3

15.2 Section 15 Proof of Review……15.4

15.1 Legislation and Reference

NOTE: There is a separate binder with Occupational Health and Safety legislation and reference. This is kept with each of Atlantic Roofers Limited/North Shore Roofing Ltd. Safety Program Binders.

15.2 Section 15 Proof of Review

Province	Legislation	Last updated
NB	Asbestos Regulations 92-106	September 30, 1992
NB	First Aid Regulations 2004-130	November 17, 2004
NB	OHS Act Chapter O-0.2	January 1, 2018
NB	OHS General Regulations 91-191	January 1, 2018
NB	WHMIS Regulations 2016-6	April 1, 2016
NB	Working Alone Regulations 92-133	September 30, 1992
NB	Violence and Harassment Regulations 208-82	April 1, 2019
NL	Asbestos Regulations 111-98	December 23, 1998
NL	First Aid Regulations 1148/96	December 9, 2013
NL	OHS Act Chapter O-3	December 9, 2013
NL	OHS General Regulations 5/12	January 17, 2012
NL	WHMIS Regulations 34-18	May 4, 2018
NS	Asbestos Regulations 53-95	August 8, 2017
NS	First Aid Regulations 104/2001	September 3, 2001
NS	OHS Act Chapter 7	June 1, 2017
NS	WHMIS Regulations 64/89	May 9, 1989
NS	Workplace Health & Safety Regulations 52/2013	October 1, 2017
NS	Violence in the Workplace Regulations 209/2007	April 1, 2008
NS	General OHS Regulations 53/2013	June 12, 2013
PE	Fall Protection Regulations O-1.01	June 9, 2012
PE	OHS Act Chapter O-1	December 2, 2015
PE	OHS General Regulations Chapter O-1	January 31, 2013
PE	Scaffolding Regulations Chapter O-1.01	October 28, 2017
PE	WHMIS Regulations Chapter O-1	July 29, 2017

118 Cocagne Cross Road
Cocagne, NB E4R 2J2
Tel.: (506) 576-6683 Fax: (506) 576-9714

SUPPLEMENTARY INFORMATION

Section 16

Section 16

Supplementary Information

16.1 Master List – Forms……16.3

16.2 Forms by Requirement……...16.5

16.1 Master List – Forms

Form Name	Form Number	H & S Program Section	
Right to Refuse	F-01-1	1	Health & Safety
Employee Performance Evaluation	F-01-2	1	Health & Safety
Large Job Site Hazard Assessment	F-02-1	2	Hazard Assessment
Fall Protection Plan	F-02-2	2	Hazard Assessment
Field Level Risk Assessment	F-02-3	2	Hazard Assessment
Employee Warning Notice	F-05-1	5	Company Rules
Aerial Lift Daily Inspection	F-07-1	7	Maintenance
Forklift Daily Inspection	F-07-2	7	Maintenance
General Roofing Equipment Daily Inspection	F-07-3	7	Maintenance
Company Vehicle Incident Report	F-07-4	7	Maintenance
General Hoist Daily Inspection	F-07-5	7	Maintenance
Visitor Safety Orientation	F-08-1	8	Training and Communications
Tool Box Meeting Minutes	F-08-2	8	Training and Communications
Incident Report	F-10-1	10	Investigations
Emergency Response Orientation	F-12-1	12	Emergency Preparedness
Supervisor Performance Evaluation	M-01-1	1	Health & Safety
Letter to Physician	M-14-1	14	HR Policies
Treatment from Physician	M-14-2	14	HR Policies
Offer of Modified Work	M-14-3	14	HR Policies
Employee Progress Evaluation	M-14-4	14	HR Policies
Sub-Contractor Declaration	P-01-1	1	Health & Safety
Pre-Construction Sub-Contractor Safety Checklist	P-01-2	1	Health & Safety
Roof Loading Assessment	P-02-1	2	Hazard Assessment
Tool/Vehicle/Equipment Maintenance	P-07-1	7	Maintenance
Monthly Safety Summary	P-13-1	13	Records & Statistics
Reasonable Grounds Testing	P-14-1	14	HR Policies
Post Incident Testing	P-14-2	14	HR Policies
Alcohol & Drug Testing Consent	P-14-3	14	HR Policies
Alcohol & Drug Testing Information Release	P-14-4	14	HR Policies
Employee Assistance Program Referral	P-14-5	14	HR Policies
Comprehensive Hazard Assessment Annual Review	S-02-1	2	Hazard Assessment
Critical Task Inventory	S-02-2	2	Hazard Assessment
Controlled Product Inventory	S-02-3	2	Hazard Assessment
Tool and Equipment Inventory	S-02-4	2	Hazard Assessment
Harness Inspection	S-06-1	6	Personal Protective Equipment
Non Self Retracting Lanyard Inspection	S-06-2	6	Personal Protective Equipment
Self Retracting Lanyard Inspection	S-06-3	6	Personal Protective Equipment
Lifeline Inspection	S-06-4	6	Personal Protective Equipment
Rope Grab Inspection	S-06-5	6	Personal Protective Equipment
Rollgliss Rescue Kit Inspection	S-06-6	6	Personal Protective Equipment
Emergency Equipment Inspection	S-07-1	7	Maintenance
Employee Safety Orientation	S-08-1	8	Training and Communications
Employee Training Record	S-08-2	8	Training and Communications

Monthly Inspection	S-09-1	9	Inspections
Investigation Report	S-10-1	10	Investigations
Worksafe Provincial Reporting	S-10-2	10	Investigations
Environmental Incident Report	S-11-1	11	Environmental
Emergency Response Drill	S-12-1	12	Emergency Preparedness
Yearly Safety Summary by Branch	S-13-1	13	Records & Statistics

16.2 Forms by Requirement

Form Name	Form Number	H & S Program Section	
BEFORE CREW STARTS			
Large Job Site Hazard Assessment (Large Job)	F-02-1	2	Hazard Assessment
Field Level Risk Assessment (Small Job)	F-02-3	2	Hazard Assessment
Roof Loading Assessment	P-02-1	2	Hazard Assessment
1ST DAY REVIEW WITH CREW			
Fall Protection Plan	F-02-2	2	Hazard Assessment
Emergency Response Orientation	F-12-1	12	Emergency Preparedness
DAILY			
Field Level Risk Assessment	F-02-3	2	Hazard Assessment
Aerial Lift Daily Inspection	F-07-1	7	Maintenance
Forklift Daily Inspection	F-07-2	7	Maintenance
General Roofing Equipment Daily Inspection	F-07-3	7	Maintenance
WEEKLY			
Tool Box Meeting Minutes	F-08-2	8	Training and Communications
MONTHLY			
Monthly Safety Summary	P-13-1	13	Records & Statistics
Monthly Inspection	S-09-1	9	Inspections
YEARLY			
Employee Performance Evaluation	F-01-2	1	Health & Safety
Supervisor Performance Evaluation	M-01-1	1	Health & Safety
Tool/Vehicle/Equipment Maintenance	P-07-1	7	Maintenance
Comprehensive Hazard Assessment Annual Review	S-02-1	2	Hazard Assessment
Critical Task Inventory	S-02-2	2	Hazard Assessment
Controlled Product Inventory	S-02-3	2	Hazard Assessment
Tool and Equipment Inventory	S-02-4	2	Hazard Assessment
Harness Inspection	S-06-1	6	Personal Protective Equipment
Non Self Retracting Lanyard Inspection	S-06-2	6	Personal Protective Equipment
Self Retracting Lanyard Inspection	S-06-3	6	Personal Protective Equipment
Lifeline Inspection	S-06-4	6	Personal Protective Equipment
Rope Grab Inspection	S-06-5	6	Personal Protective Equipment
Rollgliss Rescue Kit Inspection	S-06-6	6	Personal Protective Equipment
Emergency Equipment Inspection	S-07-1	7	Maintenance
Employee Safety Orientation	S-08-1	8	Training and Communications
Emergency Response Drill	S-12-1	12	Emergency Preparedness
Yearly Safety Summary by Branch	S-13-1	13	Records & Statistics
AS REQUIRED			
Right to Refuse	F-01-1	1	Health & Safety
Employee Warning Notice	F-05-1	5	Company Rules
Company Vehicle Incident Report	F-07-4	7	Maintenance

Visitor Safety Orientation	F-08-1	8	Training and Communications
Incident Report	F-10-1	10	Investigations
Letter to Physician	M-14-1	14	HR Policies
Treatment from Physician	M-14-2	14	HR Policies
Offer of Modified Work	M-14-3	14	HR Policies
Employee Progress Evaluation	M-14-4	14	HR Policies
Sub-Contractor Declaration	P-01-1	1	Health & Safety
Pre-Construction Sub-Contractor Safety Checklist	P-01-2	1	Health & Safety
Reasonable Grounds Testing	P-14-1	14	HR Policies
Post Incident Testing	P-14-2	14	HR Policies
Alcohol & Drug Testing Consent	P-14-3	14	HR Policies
Alcohol & Drug Testing Information Release	P-14-4	14	HR Policies
Employee Assistance Program Referral	P-14-5	14	HR Policies
Employee Training Record	S-08-2	8	Training and Communications
Investigation Report	S-10-1	10	Investigations
Worksafe Provincial Reporting	S-10-2	10	Investigations
Environmental Incident Report	S-11-1	11	Environmental